Second Revised Edition - 2009

Electromagnetic Waves and Transmission Lines

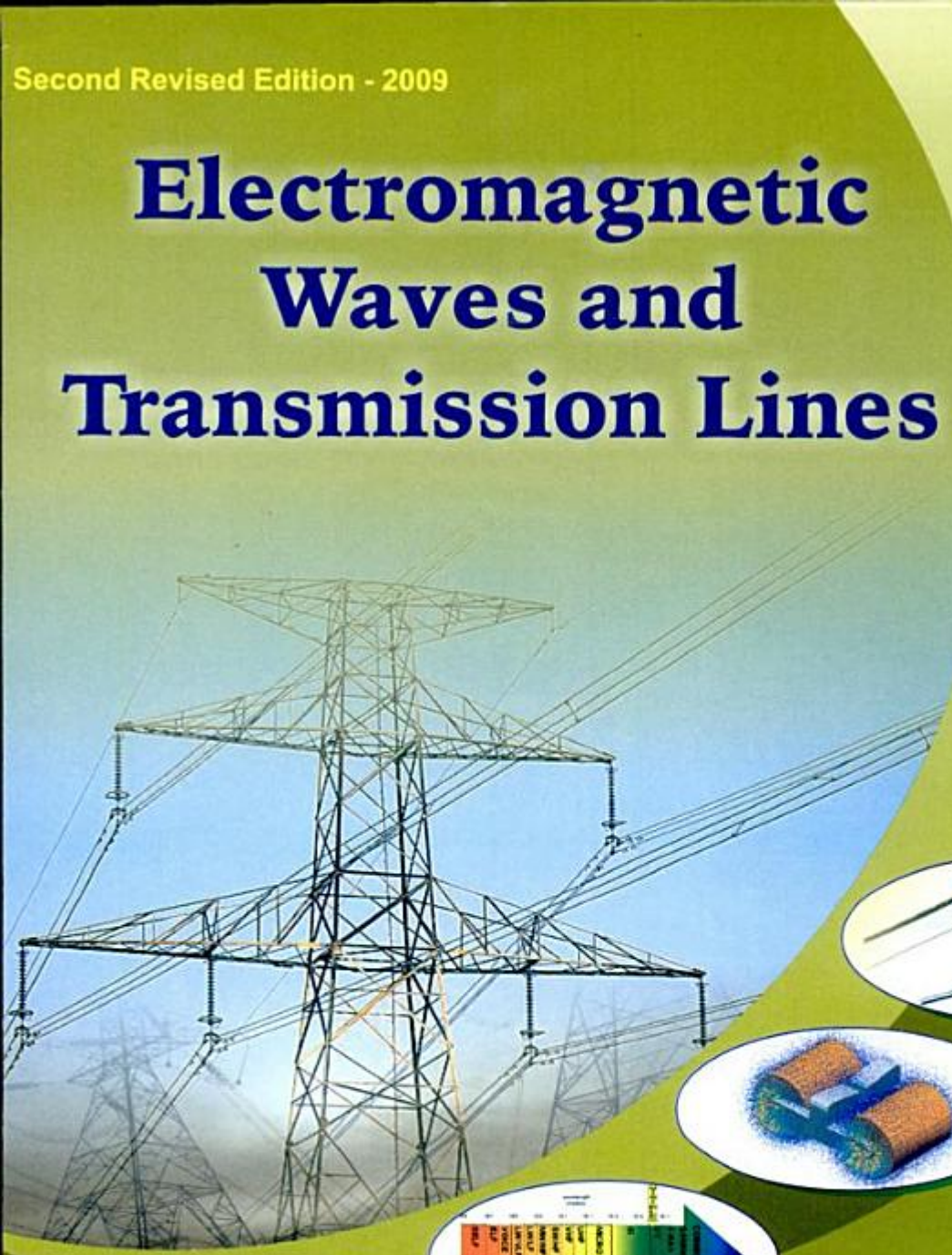

U. A. Bakshi
A. V. Bakshi

Technical Publications Pune®

Electromagnetic Waves & Transmission Lines

ISBN 9788184314946

Published by :

Technical Publications Pune®

#1, Amit Residency, 412, Shaniwar Peth, Pune - 411 030, India.

Printer :

Alert DTPrinters
Sr.no. 10/3,Sinhagad Road,
Pune - 411 041

Table of Contents

Chapter - 12 Transmission Line at Radio Frequencies 708

General Physical Constants

Constant	Symbol	Value	Unit
1. Electronic charge	e	1.602×10^{-19}	C
2. Electronic mass	m	9.109×10^{-31}	kg
3. Boltzmann's constant	k	8.62×10^{-5}	eV/°K
4. Velocity of light	c	2.998×10^{8}	m/sec
5. Acceleration of gravity	g	9.807	m/sec^2
6. Permittivity of free space	ε_0	8.854×10^{-12}	F/m
7. Permeability of free space	μ_0	$4\pi \times 10^{-7}$	H/m

Trigonometry

Signs of the functions :

Quadrant	Magnitude of angle	sin	cos	tan	cot	sec	cosec
I	0° to 90°	+	+	+	+	+	+
II	90° to 180°	+	–	–	–	–	+
III	180° to 270°	–	–	+	+	–	–
IV	270° to 360°	–	+	–	–	+	–

Values of negative angles :

$$\sin(-\theta) = -\sin\theta, \qquad \sec(-\theta) = \sec\theta$$

$$\cos(-\theta) = \cos\theta, \qquad \operatorname{cosec}(-\theta) = -\operatorname{cosec}\theta$$

$$\tan(-\theta) = -\tan\theta, \qquad \cot(-\theta) = -\cot\theta$$

Important identities :

$$\sin^2\theta + \cos^2\theta = 1, \qquad \sin\theta = \sqrt{1-\cos^2\theta}$$

$$1 + \tan^2\theta = \sec^2\theta, \qquad \cos\theta = \sqrt{1-\sin^2\theta}$$

$$1 + \cot^2\theta = \operatorname{cosec}^2\theta, \qquad \cos 2\theta = \cos^2\theta - \sin^2\theta$$

$$\sin 2\theta = 2\sin\theta\cos\theta, \qquad \cos 2\theta = 1 - 2\sin^2\theta = 2\cos^2\theta - 1$$

$$1 - \cos 2\theta = 2\sin^2\theta, \qquad 1 + \cos 2\theta = 2\cos^2\theta$$

$$\tan^2\theta = \frac{1-\cos 2\theta}{1+\cos 2\theta}, \qquad \tan 2\theta = \frac{2\tan\theta}{1-\tan^2\theta}$$

$$\sin(\alpha \pm \beta) = \sin\alpha\cos\beta \pm \cos\alpha\sin\beta$$

$$\cos(\alpha \pm \beta) = \cos\alpha\cos\beta \mp \sin\alpha\sin\beta$$

$$\tan(\alpha \pm \beta) = \frac{\tan\alpha \pm \tan\beta}{1 \mp \tan\alpha \tan\beta}$$

$$\sin A \sin B = \frac{1}{2}\{\cos(A-B) - \cos(A+B)\}$$

$$\cos A \cos B = \frac{1}{2}\{\cos(A-B) + \cos(A+B)\}$$

$$\sin A \cos B = \frac{1}{2}\{\sin(A-B) + \sin(A+B)\}$$

$$\cos A \sin B = \frac{1}{2}\{\sin(A+B) - \sin(A-B)\}$$

$$\sin\theta = \frac{e^{j\theta} - e^{-j\theta}}{2j}, \qquad \cos\theta = \frac{e^{j\theta} + e^{-j\theta}}{2}$$

$$e^{j\theta} = \cos\theta + j\sin\theta, \qquad e^{-j\theta} = \cos\theta - j\sin\theta$$

$$\cosh^2\theta - \sinh^2\theta = 1, \qquad \operatorname{sech}^2\theta + \tanh^2\theta = 1$$

$$\coth^2\theta - \operatorname{cosech}^2\theta = 1, \qquad \sinh 2\theta = 2\sinh\theta\cosh\theta$$

$$\cosh 2\theta = \cosh^2\theta + \sinh^2\theta, \qquad \sinh\theta = \frac{e^{\theta} - e^{-\theta}}{2}$$

$$\cosh\theta = \frac{e^{\theta} + e^{-\theta}}{2}, \qquad \tanh\theta = \frac{e^{\theta} - e^{-\theta}}{e^{\theta} + e^{-\theta}}$$

$$\sinh(\alpha \pm \beta) = \sinh\alpha\cosh\beta \pm \cosh\alpha\sinh\beta$$

$$\cosh(\alpha \pm \beta) = \cosh\alpha\cosh\beta \pm \sinh\alpha\sinh\beta$$

$$\sinh^{-1}(\theta) = ln\left[\theta + \sqrt{\theta^2 + 1}\right]$$

$$\cosh^{-1}(\theta) = ln\left[\theta + \sqrt{\theta^2 - 1}\right]$$

$$\tanh^{-1}(\theta) = \frac{1}{2} ln\left[\frac{1+\theta}{1-\theta}\right]$$

$$\sinh^{-1}\left(\frac{1}{\theta}\right) = ln\left[\frac{1}{\theta} + \sqrt{1 + \frac{1}{\theta^2}}\right]$$

Differential Calculus

$$\frac{d}{dx}(x) = 1, \qquad \frac{d}{dx}(x^n) = n\,x^{n-1}$$

$$\frac{d}{dx}(a^x) = a^x\,ln(a), \qquad \frac{d}{dx}(e^x) = e^x$$

$$\frac{d}{dx}(lnx) = \frac{1}{x}, \qquad \frac{d}{dx}(u^n) = n\,u^{n-1}\frac{du}{dx}$$

$$\frac{d}{dx}(uv) = u\frac{dv}{dx} + v\frac{du}{dx}$$

$$\frac{d}{dx}\left(\frac{u}{v}\right) = \frac{v\frac{du}{dx} - u\frac{dv}{dx}}{v^2} = \frac{vu' - uv'}{v^2}$$

$$\frac{d}{dx}(\sin x) = \cos x, \qquad \frac{d}{dx}(\cos x) = -\sin x$$

$$\frac{d}{dx}(\tan x) = \sec^2 x, \qquad \frac{d}{dx}(\cot x) = -\operatorname{cosec}^2 x$$

$$\frac{d}{dx}(\sec x) = \sec x \tan x, \qquad \frac{d}{dx}(\operatorname{cosec} x) = -\operatorname{cosec} x \cot x$$

$$\frac{d}{dx}(\sin ax) = a\cos ax, \qquad \frac{d}{dx}(\cos ax) = -a\sin ax$$

$$\frac{d}{dx}(\tan ax) = a\sec^2 ax, \qquad \frac{d}{dx}(\sin^{-1} x) = \frac{1}{\sqrt{1-x^2}}$$

$$\frac{d}{dx}(\cos^{-1}x) = -\frac{1}{\sqrt{1-x^2}}, \qquad \frac{d}{dx}(\tan^{-1}x) = \frac{1}{1+x^2}$$

$$\frac{d}{dx}(\sin^{-1}ax) = \frac{a}{\sqrt{1-a^2x^2}}, \qquad \frac{d}{dx}(\cos^{-1}ax) = \frac{-a}{\sqrt{1-a^2x^2}}$$

$$\frac{d}{dx}(\tan^{-1}ax) = \frac{1}{1+a^2x^2}$$

Integral Calculus

$$\int x^n dx = \frac{x^{n+1}}{n+1}, \qquad \int \frac{1}{x} dx = ln\ x$$

$$\int e^x dx = e^x, \qquad \int e^{ax} dx = \frac{e^{ax}}{a}$$

$$\int \sin x dx = -\cos x, \qquad \int \cos x dx = \sin x$$

$$\int \tan x dx = ln \sec x = -ln \cos x$$

$$\int \cot x dx = ln \sin x = -ln \operatorname{cosec} x$$

$$\int \sec x dx = ln\left\{\tan\left(\frac{x}{2}+\frac{\pi}{4}\right)\right\} = ln\ (\sec x + \tan x)$$

$$\int \operatorname{cosec} x dx = ln\left\{\tan\left(\frac{x}{2}\right)\right\} = ln\ (\operatorname{cosec} x - \cot x)$$

$$\int \sin^2 x dx = \frac{x}{2} - \frac{1}{2}\sin x \cos x$$

$$\int \cos^2 x dx = \frac{x}{2} + \frac{1}{2}\sin x \cos x$$

$$\int (ax+b)^n dx = \frac{1}{a(n+1)}(ax+b)^{n+1}$$

$$\int \frac{dx}{ax+b} = \frac{1}{a} ln(ax+b), \int \frac{dx}{(ax+b)^2} = -\frac{1}{a(ax+b)}$$

$$\int \frac{dx}{(ax+b)^n} = \frac{-1}{(n-1)\,a(ax+b)^{n-1}}$$

$$\int \frac{dx}{a^2+x^2} = \frac{1}{a}\tan^{-1}\frac{x}{a} = -\frac{1}{a}\cot^{-1}\frac{x}{a}$$

$$\int \frac{dx}{a^2-x^2} = \frac{1}{a}\tan^{-1}\frac{x}{a} = \frac{1}{2a}\,ln\frac{a+x}{a-x} \quad \text{when } x < a$$

$$= \frac{1}{a}\coth^{-1}\frac{x}{a} = \frac{1}{2a}\,ln\frac{x+a}{x-a} \quad \text{when } x > a$$

$$\int \frac{dx}{\sqrt{a^2-x^2}} = \sin^{-1}\frac{x}{a} = -\cos^{-1}\frac{x}{a}$$

$$\int \frac{dx}{\sqrt{x^2 \pm a^2}} = ln\left(x+\sqrt{x^2 \pm a^2}\right)$$

$$\int \frac{dx}{x\sqrt{x^2-a^2}} = \frac{1}{a}\sec^{-1}\left(\frac{x}{a}\right) = \frac{1}{a}\cos^{-1}\left(\frac{a}{x}\right)$$

$$\int \frac{dx}{x\sqrt{a^2 \pm x^2}} = -\frac{1}{a}\,ln\left\{\frac{a+\sqrt{a^2 \pm x^2}}{x}\right\}$$

$$\int \sqrt{x^2 \pm a^2}\,dx = \frac{1}{2}\left\{x\sqrt{x^2 \pm a^2} \pm a^2 \ln\left(x+\sqrt{x^2 \pm a^2}\right)\right\}$$

$$\int \frac{dx}{x(ax+b)} = \frac{1}{b}\log\frac{x}{ax+b}$$

$$\int \sin ax\,dx = -\frac{1}{a}\cos ax$$

$$\int \sin^2 ax\,dx = \frac{x}{2} - \frac{\sin 2ax}{4a}$$

$$\int \frac{dx}{\sin ax} = \frac{1}{a}\log\tan\frac{ax}{2} = \frac{1}{a}\log(\operatorname{cosec} ax - \cot ax)$$

$$\int \cos ax\,dx = \frac{1}{a}\sin ax$$

$$\int \cos^2 ax\,dx = \frac{x}{2} + \frac{\sin^2 ax}{4a}$$

$$\int \frac{dx}{\cos ax} = \frac{1}{a}\log\tan\left(\frac{ax}{2}+\frac{\pi}{4}\right) = \frac{1}{a}\log(\sec ax + \tan ax)$$

$$\int \sin ax \sin bx\, dx = \frac{\sin(a-b)x}{2(a-b)} - \frac{\sin(a+b)x}{2(a+b)} \qquad \text{when } a^2 \neq b^2$$

$$\int x^n \sin ax\, dx = \frac{-x^n \cos ax + n\int x^{n-1}\cos ax\, dx}{a}$$

$$\int x^n \cos ax\, dx = \frac{x^n \sin ax - n\int x^{n-1}\sin ax\, dx}{a}$$

$$\int uv\, dx = u\int v\, dx - \int\left[\frac{du}{dx}\int v\, dx\right]dx \qquad \text{... Integration by parts}$$

1

Vector Analysis

1.1 Introduction

Electromagnetics is a branch of physics or electrical engineering which is used to study the electric and magnetic phenomena. The electric and magnetic fields are closely related to each other.

Let us see, what is a field ? Consider a magnet. It has its own effect in a region surrounding it. The effect can be experienced by placing another magnet near the first magnet. Such an effect can be defined by a particular physical function. In the region surrounding the magnet, there exists a particular value for that physical function, at every point, describing the effect of magnet. So field can be defined as the region in which, at each point there exists a corresponding value of some physical function.

Thus field is a function that specifies a quantity everywhere in a region or a space. If at each point of a region or space, there is a corresponding value of some physical function then the region is called a field. If the field produced is due to magnetic effects, it is called **magnetic field**. There are two types of electric charges, positive and negative. Such an electric charge produces a field around it which is called an **electric field**. Moving charges produce a current and current carrying conductor produces a magnetic field. In such a case, electric and magnetic fields are related to each other. Such a field is called **electromagnetic field**. The comprehensive study of characteristics of electric, magnetic and combined fields, is nothing but the **engineering electromagnetics**. Such fields may be time varying or time independent.

It is seen that distribution of a quantity in a space is defined by a field. Hence to quantify the field, three dimensional representation plays an important role. Such a three dimensional representation can be made easy by the use of vector analysis. The problems involving various mathematical operations related to the fields

distributed in three dimensional space can be conveniently handled with the help of vector analysis. A complete pictorial representation and clear understanding of the fields and the laws governing such fields, is possible with the help of vector analysis. Thus a good knowledge of vector analysis is an essential prerequisite for the understanding of engineering electromagnetics. The vector analysis is a mathematical shorthand tool with which electromagnetic concepts can be most conveniently expressed.

This chapter gives the basic vector analysis required to understand engineering electromagnetics. The notations used in this chapter are follwed throughout this book to explain the subject.

1.2 Scalars and Vectors

The various quantities involved in the study of engineering electromagnetics can be classified as,

1. Scalars and 2. Vectors

1.2.1 Scalar

The scalar is a quantity whose value may be represented by a single real number, which may be positive or negative. The direction is not at all required in describing a scalar. Thus,

A **scalar** is a quantity which is wholly characterized by its magnitude.

The various examples of scalar quantity are temperature, mass, volume, density, speed, electric charge etc.

1.2.2 Vector

A quantity which has both, a magnitude and a specific direction in space is called a **vector**. In electromagnetics vectors defined in two and three dimensional spaces are required but vectors may be defined in n-dimensional space. Thus,

A **vector** is a quantity which is characterized by both, a magnitude and a direction.

The various examples of vector quantity are force, velocity, displacement, electric field intensity, magnetic field intensity, acceleration etc.

1.2.3 Scalar Field

A field is a region in which a particular physical function has a value at each and every point in that region. The distribution of a scalar quantity with a definite

position in a space is called **scalar field**. For example the temperature of atmosphere. It has a definite value in the atmosphere but no need of direction to specify it hence it is a scalar field. The height of surface of earth above sea level is a scalar field. Few other examples of scalar field are sound intensity in an auditorium, light intensity in a room, atmospheric pressure in a given region etc.

1.2.4 Vector Field

If a quantity which is specified in a region to define a field is a vector then the corresponding field is called a **vector field**. For example the gravitational force on a mass in a space is a vector field. This force has a value at various points in a space and always has a specific direction.

The other examples of vector field are the velocity of particles in a moving fluid, wind velocity of atmosphere, voltage gradient in a cable, displacement of a flying bird in a space, magnetic field existing from north to south field etc.

1.3 Representation of a Vector

In two dimensions, a vector can be represented by a straight line with an arrow in a plane. This is shown in the Fig. 1.1. The length of the segment is the magnitude of a vector while the arrow indicates the direction of the vector in a given co-ordinate system. The vector shown in the Fig. 1.1 is symbolically denoted as $\overline{OA}$. The point O is its starting point while A is its terminating point. Its length is called its magnitude, which is R for the vector OA shown. It is represented as $|\overline{OA}| = R$ It is the distance between the starting point and terminating point of a vector.

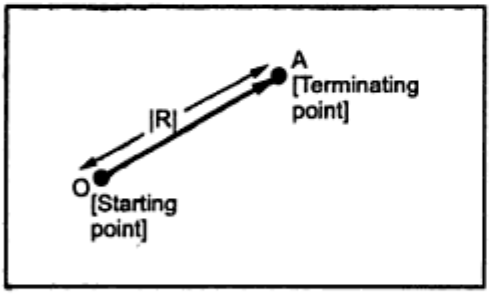

Fig. 1.1 Representation of a vector

Key Point: *The vector hereafter will be indicated by bold letter with a bar over it.*

1.3.1 Unit Vector

A unit vector has a function to indicate the direction. Its magnitude is always **unity**, irrespective of the direction which it indicates and the co-ordinate system under consideration. Thus for any vector, to indicate its direction a unit vector can be used. Consider a unit vector $\bar{\mathbf{a}}_{OA}$ in the direction of $\overline{OA}$ as shown in the Fig. 1.2. This vector indicates the direction of $\overline{OA}$ but its magnitude is unity.

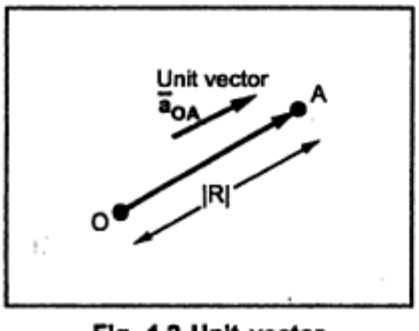

Fig. 1.2 Unit vector

So vector $\overline{OA}$ can be represented completely as its magnitude R and the direction as indicated by unit vector along its direction.

$$\therefore \qquad \overline{OA} = \left|\overline{OA}\right| \bar{a}_{OA} = R\,\bar{a}_{OA}$$

where $\bar{a}_{OA}$ = Unit vector along the direction OA and $|\bar{a}_{OA}| = 1$

Key Point: *Hereafter, letter $\bar{a}$ is used to indicate the unit vector and its suffix indicates the direction of the unit vector. Thus $\bar{a}_x$ indicates the unit vector along x axis direction.*

Incase if a vector is known then the unit vector along that vector can be obtained by dividing the vector by its magnitude. Thus unit vector can be expressed as,

$$\boxed{\text{Unit vector } \bar{a}_{OA} = \frac{\overline{OA}}{\left|\overline{OA}\right|}}$$

The idea and use of unit vector will be more clear at the time of discussion of various co-ordinate systems, later in the chapter.

1.4 Vector Algebra

The various mathematical operations such as addition, subtraction, multiplication etc. can be performed with the vectors. In this section the following mathematical operations with the vectors are discussed.

1. Scaling 2. Addition 3. Subtraction

1.4.1 Scaling of Vector

This is nothing but, **multiplication by a scalar** to a vector. Such a multiplication changes the magnitude (length) of a vector but not its direction, **when the scalar is positive.**

Let α = **scalar** with which vector is to be multiplied

Then if $\alpha > 1$ then the magnitude of a vector increases but direction remains same, when multiplied. This is shown in the Fig. 1.3 (a). If $\alpha < 1$ then the magnitude of a vector decreases but direction remains same, when multiplied. This is shown in the Fig. 1.3 (b).

If $\alpha = -1$ then the **magnitude remains same** but **direction of the vector reverses,** when multiplied. This is shown in the Fig. 1.3 (c).

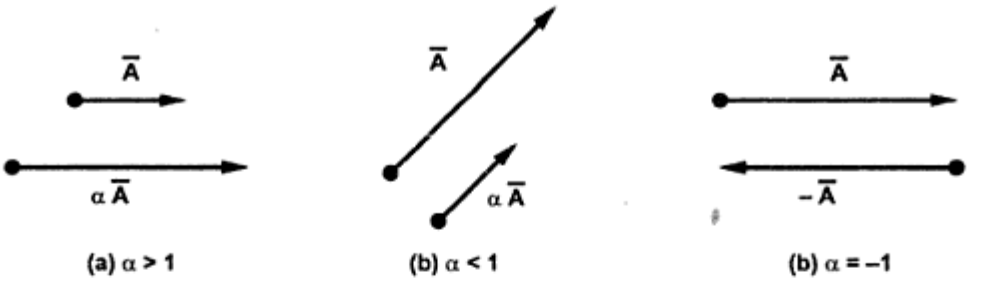

Fig. 1.3 Multiplication by a scalar

Key Point : *Thus if α is negative, the magnitude of vector changes by α times while the direction becomes exactly opposite to the original vector, after multiplication.*

1.4.2 Addition of Vectors

Consider two coplanar vectors as shown in the Fig. 1.4. The vectors which lie in the same plane are called **coplanar vectors.**

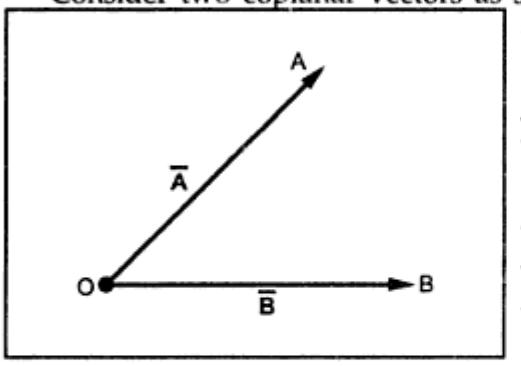

Fig. 1.4 Coplanar vectors

Let us find the sum of these two vectors $\overline{A}$ and $\overline{B}$, shown in the Fig. 1.4.

The procedure is to move one of the two vectors parallel to itself at the tip of the other vector. Thus move $\overline{A}$, parallel to itself at the tip of $\overline{B}$.

Then join tip of $\overline{A}$ moved, to the origin. This vector represents resultant which is the addition of the two vectors $\overline{A}$ and $\overline{B}$. This is shown in the Fig. 1.5.

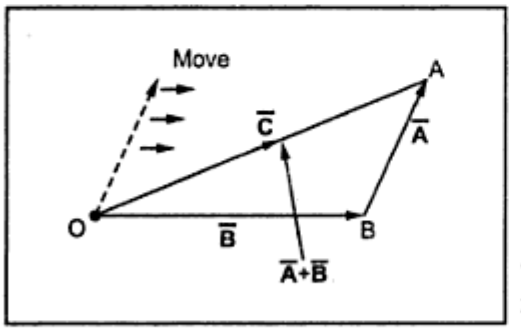

Fig. 1.5 Addition of vectors

Let us denote this resultant as $\overline{C}$ then

$$\overline{C} = \overline{A} + \overline{B}$$

It must be remembered that the direction of $\overline{C}$ is from origin O to the tip of the vector moved.

Another point which can be noticed that if $\overline{B}$ is moved parallel to itself at the tip of $\overline{A}$, we get the same resultant $\overline{C}$. Thus, the order of the addition is not important. The addition of vectors obeys the commutative law i.e. $\overline{A} + \overline{B} = \overline{B} + \overline{A}$.

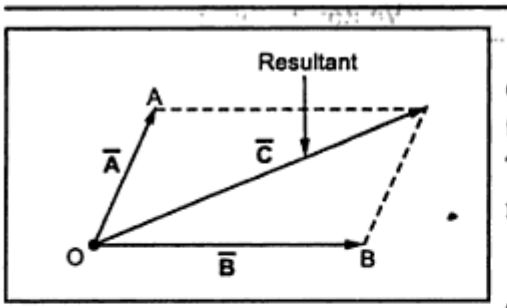

Fig. 1.6 Parallelogram rule for addition

Another method of performing the addition of vectors is the **parallelogram rule**. Complete the parallelogram as shown in the Fig. 1.6. Then the diagonal of the parallelogram represents the addition of the two vectors.

By using any of these two methods not only two but any number of vectors can be added to obtain the resultant. For example, consider four vectors as shown in the Fig. 1.7 (a). These can be added by shifting these vectors one by one to the tip of other vectors to complete the polygon. The vector joining origin O to the tip of the last shifted vector represents the sum, as shown in the Fig. 1.7 (b). This method is called **head to tail rule** of addition of vectors.

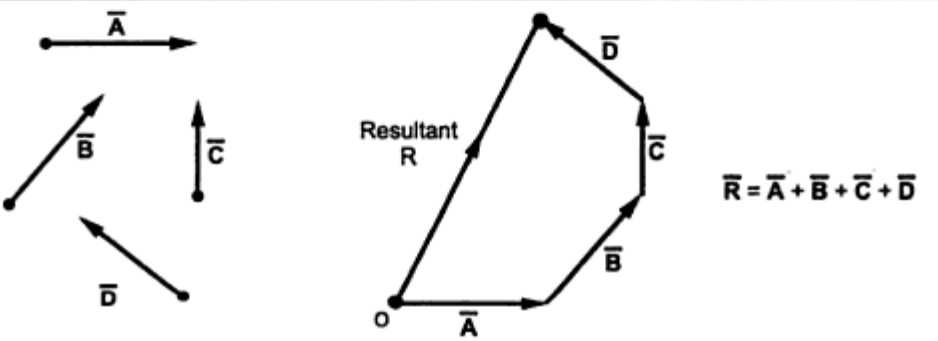

(a) Four vectors (b) Sum of the four vectors

Fig. 1.7

Once the co-ordinate systems are defined, then the vectors can be expressed in terms of the components along the axes of the co-ordinate system. Then by adding the corresponding components of the vectors, the components of the resultant vector which is the addition of the vectors, can be obtained. This method is explained after the co-ordinate systems are discussed.

The following basic laws of algebra are obeyed by the vectors $\overline{A}$, $\overline{B}$ and $\overline{C}$:

Law	Addition	Multiplication by scalar
Commutative	$\overline{A} + \overline{B} = \overline{B} + \overline{A}$	$\alpha\overline{A} = \overline{A}\alpha$
Associative	$\overline{A} + (\overline{B} + \overline{C}) = (\overline{A} + \overline{B}) + \overline{C}$	$\beta(\alpha\overline{A}) = (\beta\alpha)\overline{A}$
Distributive	$\alpha(\overline{A} + \overline{B}) = \alpha\overline{A} + \alpha\overline{B}$	$(\alpha + \beta)\overline{A} = \alpha\overline{A} + \beta\overline{A}$

Table 1.1

In this table α and β are the scalars i.e. constants.

1.4.3 Subtraction of Vectors

The subtraction of vectors can be obtained from the rules of addition. If $\overline{\mathbf{B}}$ is to be subtracted from $\overline{\mathbf{A}}$ then based on addition it can be represented as,

$$\overline{\mathbf{C}} = \overline{\mathbf{A}} + (-\overline{\mathbf{B}})$$

Thus reverse the sign of $\overline{\mathbf{B}}$ i.e. reverse its direction by multiplying it with –1 and then add it to $\overline{\mathbf{A}}$ to obtain the subtraction. This is shown in the Fig. 1.8 (a) and (b).

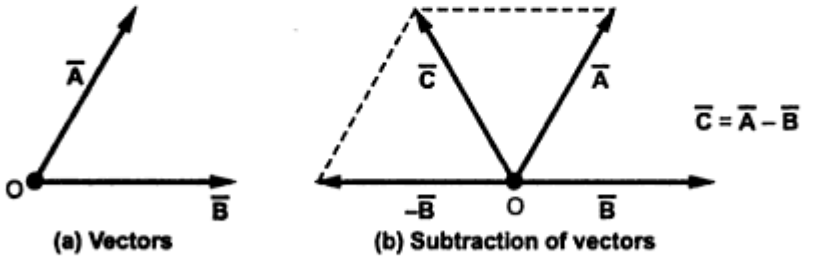

Fig. 1.8

1.4.3.1 Identical Vectors

Two vectors are said to be **identical** if there difference is zero. Thus $\overline{\mathbf{A}}$ and $\overline{\mathbf{B}}$ are identical if $\overline{\mathbf{A}} - \overline{\mathbf{B}} = 0$ i.e. $\overline{\mathbf{A}} = \overline{\mathbf{B}}$. Such two vectors are also called **equal vectors.**

1.5 The Coordinate Systems

To describe a vector accurately and to express a vector in terms of its components, it is necessary to have some reference directions. Such directions are represented in terms of various coordinate systems. There are various coordinate systems available in mathematics, out of which three coordinate systems are used in this book, which are

1. Cartesian or rectangular coordinate system
2. Cylindrical coordinate system
3. Spherical coordinate system

Let us discuss these systems in detail.

1.6 Cartesian Coordinate System

This is also called **rectangular coordinate system.** This system has three coordinate axes represented as x, y and z which are mutually at right angles to each

Now the three components of this position vector $\bar{r}_{OP}$ are three vectors oriented along the three coordinate axes with the magnitudes x_1, y_1 and z_1. Thus the position vector of point P can be represented as,

$$\boxed{\bar{r}_{OP} = x_1 \bar{a}_x + y_1 \bar{a}_y + z_1 \bar{a}_z} \quad \text{... (1)}$$

The **magnitude** of this vector interms of three mutually perpendicular components is given by,

$$\boxed{|\bar{r}_{OP}| = \sqrt{(x_1)^2 + (y_1)^2 + (z_1)^2}} \quad \text{... (2)}$$

Thus if point P has coordinates (1,2,3) then its position vector is,

$$\bar{r}_{OP} = 1\ \bar{a}_x + 2\ \bar{a}_y + 3\ \bar{a}_z$$

and $|\bar{r}_{OP}| = \sqrt{(1)^2 + (2)^2 + (3)^2} = \sqrt{14} = 3.7416$

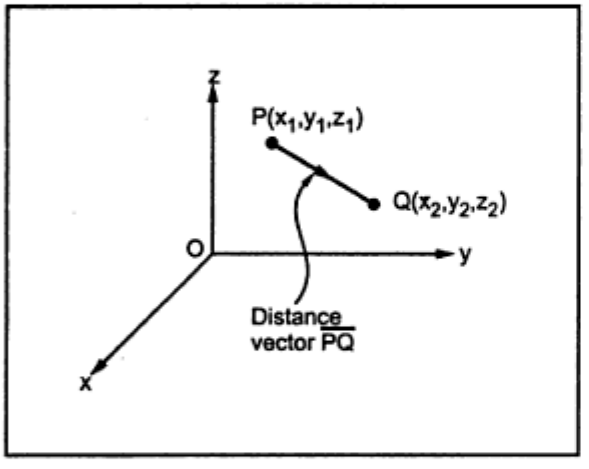

Fig. 1.14 Distance vector

Many a times the position vector is denoted by the vector representing that point itself i.e. for point P the position vector is $\bar{P}$, for point Q it is $\bar{Q}$ and so on. The same method is used hereafter in this book. Note the difference between a point and a position vector.

Now consider the two points in a cartesian coordinate system, P and Q with the coordinates (x_1, y_1, z_1) and (x_2, y_2, z_2) respectively. The points are shown in the Fig. 1.14. The individual position vectors of the points are,

$$\bar{P} = x_1 \bar{a}_x + y_1 \bar{a}_y + z_1 \bar{a}_z$$

$$\bar{Q} = x_2 \bar{a}_x + y_2 \bar{a}_y + z_2 \bar{a}_z$$

Then the distance or the displacement from P to Q is represented by a **distance vector $\overline{PQ}$** and is given by,

$$\boxed{\overline{PQ} = \bar{Q} - \bar{P} = [x_2 - x_1]\bar{a}_x + [y_2 - y_1]\bar{a}_y + [z_2 - z_1]\bar{a}_z} \quad \text{... (3)}$$

This is also called **separation vector.**

The magnitude of this vector is given by,

$$\boxed{|\overline{PQ}| = \sqrt{(x_2 - x_1)^2 + (y_2 - y_1)^2 + (z_2 - z_1)^2}} \quad \text{.... (4)}$$

This is nothing but the length of the vector PQ. The equation (4) is called **distance formula** which gives the distance between the two points representing tips of the vectors.

Using the basic concept of unit vector, we can find unit vector along the direction PQ as,

$$\boxed{\bar{a}_{PQ} = \text{Unit vector along PQ} = \frac{\overline{PQ}}{|\overline{PQ}|}} \quad \text{... (5)}$$

Once the position vectors are known then various mathematical operations can be easily performed interms of the components of the various vectors.

Let us summarize procedure to obtain **distance vector** and **unit vector**.

Step 1 : Identify the direction of distance vector i.e. starting point (x_1, y_1, z_1) and terminating point (x_2, y_2, z_2).

Step 2 : Subtract the respective coordinates of starting point from terminating point. These are three components of distance vector i.e. $(x_2 - x_1)\,\bar{a}_x$, $(y_2 - y_1)\,\bar{a}_y$ and $(z_2 - z_1)\,\bar{a}_z$

Step 3 : Adding the three components distance vector can be obtained.

Step 4 : Calculate the magnitude of the distance vector using equation (4).

Step 5 : Unit vector along the distance vector can be obtained by using equation (5).

Ex. 1.1 *Obtain the unit vector in the direction from the origin towards the point $P(3, -3, -2)$.*

Sol. : The origin O (0, 0, 0) while P (3, – 3, – 2) hence the distance vector $\overline{OP}$ is,

$$\overline{OP} = (3-0)\bar{a}_x + (-3-0)\bar{a}_y + (-2-0)\bar{a}_z = 3\bar{a}_x - 3\bar{a}_y - 2\bar{a}_z$$

$$\therefore \quad |\overline{OP}| = \sqrt{(3)^2 + (-3)^2 + (-2)^2} = 4.6904$$

Hence the unit vector along the direction OP is,

$$\bar{a}_{OP} = \frac{\overline{OP}}{|\overline{OP}|} = \frac{3\bar{a}_x - 3\bar{a}_y - 2\bar{a}_z}{4.6904}$$

$$= 0.6396\,\bar{a}_x - 0.6396\,\bar{a}_y - 0.4264\,\bar{a}_z$$

Ex. 1.2 *Two points $A(2,2,1)$ and $B(3,-4,2)$ are given in the cartesian system. Obtain the vector from A to B and a unit vector directed from A to B.*

Sol. : The starting point is A and terminating point is B.

Now $\overline{A} = 2\,\bar{a}_x + 2\bar{a}_y + \bar{a}_z$ and $\overline{B} = 3\bar{a}_x - 4\,\bar{a}_y + 2\bar{a}_z$

$\therefore \quad \overline{AB} = \overline{B} - \overline{A} = (3-2)\bar{a}_x + (-4-2)\bar{a}_y + (2-1)\bar{a}_z$

$\therefore \quad \overline{AB} = \bar{a}_x - 6\bar{a}_y + \bar{a}_z$

This is the vector directed from A to B.

Now $\left|\overline{AB}\right| = \sqrt{(1)^2 + (-6)^2 + (1)^2} = 6.1644$

Thus unit vector directed from A to B is,

$$\bar{a}_{AB} = \frac{\overline{AB}}{\left|\overline{AB}\right|} = \frac{\bar{a}_x - 6\bar{a}_y + \bar{a}_z}{6.1644}$$

$$= 0.1622\,\bar{a}_x - 0.9733\,\bar{a}_y + 0.1622\,\bar{a}_z$$

It can be cross checked that magnitude of this unit vector is unity i.e.

$\sqrt{(0.1622)^2 + (-0.9733)^2 + (0.1622)^2} = 1.$

1.6.4 Differential Elements in Cartesian Coordinate System

Consider a point P(x, y, z) in the rectangular coordinate system. Let us increase each coordinate by a differential amount. A new point P′ will be obtained having coordinates $(x + dx, y + dy, z + dz)$.

Thus, dx = Differential length in x direction

dy = Differential length in y direction

dz = Differential length in z direction

Hence differential vector length also called **elementary vector length** can be represented as,

$$\boxed{\overline{dl} = dx\,\bar{a}_x + dy\,\bar{a}_y + dz\,\bar{a}_z} \qquad \text{... (6)}$$

This is the vector joining original point P to new point P′.

Now point P is the intersection of three planes while point P′ is the intersection of three new planes which are slightly displaced from original three planes. These six planes together define a differential volume which is a rectangular parallelepiped as shown in the Fig. 1.15. The diagonal of this parallelepiped is the differential vector length.

Please refer Fig. 1.15 on next page.

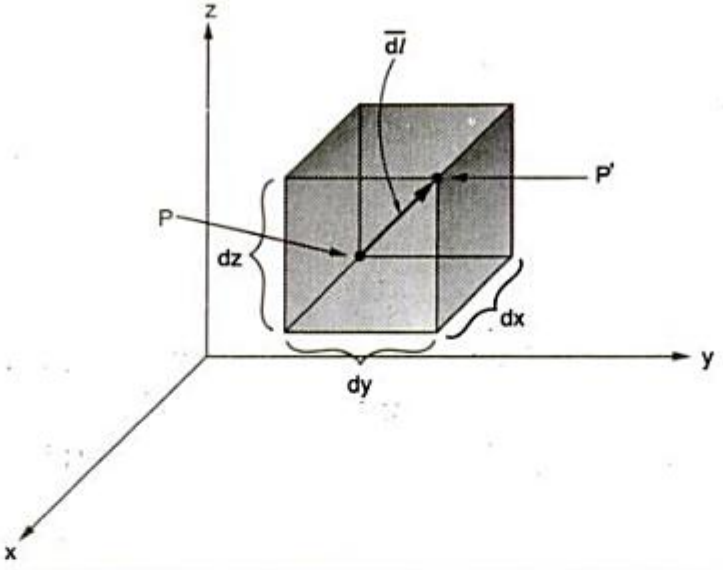

Fig. 1.15 Differential elements and different length in cartesian system

The distance of P' from P is given by magnitude of the differential vector length,

$$\boxed{\left|\overline{dl}\right| = \sqrt{(dx)^2 + (dy)^2 + (dz)^2}} \quad \text{... (7)}$$

Hence the **differential volume** of the rectangular parallelepiped is given by,

$$\boxed{dv = dx\ dy\ dz} \quad \text{... (8)}$$

Note that $\overline{dl}$ is a vector but dv is a scalar.

Let us define **differential surface areas**. The differential surface element $\overline{dS}$ is represented as,

$$\boxed{d\overline{S} = dS\,\overline{a}_n} \quad \text{... (9)}$$

where dS = Differential surface area of the element

$\overline{a}_n$ = Unit vector normal to the surface dS

Thus various differential surface elements in cartesian coordinate system are shown in the Fig. 1.16.

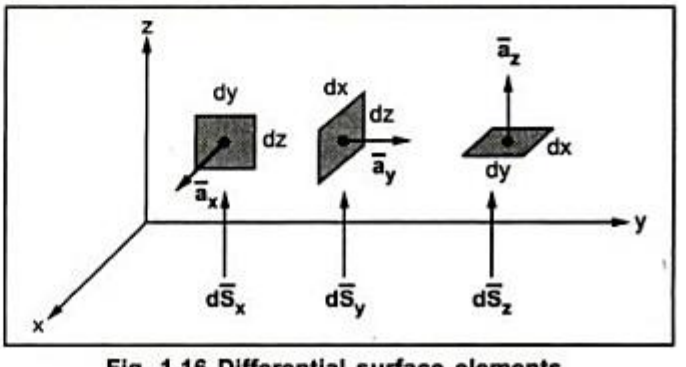

Fig. 1.16 Differential surface elements in cartesian system

The vector representation of these elements is given as,

$$d\overline{S}_x = \text{Differential vector surface area normal to x direction}$$

$$= dydz\ \overline{a}_x \quad \text{... (10)}$$

$$d\overline{S}_y = \text{Differential vector surface area normal to y direction}$$

$$= dxdz\ \overline{a}_y \quad \text{... (11)}$$

$$d\overline{S}_z = \text{Differential vector surface area normal to z direction}$$

$$= dxdy\ \overline{a}_z \quad \text{... (12)}$$

The differential elements play very important role in the study of engineering electromagnetics.

Ex. 1.3 *Given three points in cartesian coordinate system as* $A(3,-2,1)$, $B(-3,-3,5)$, $C(2,6,-4)$.

Find : i) The vector from A to C.

ii) The unit vector from B to A.

iii) The distance from B to C.

iv) The vector from A to the midpoint of the straight line joining B to C.

Sol. : The position vectors for the given points are,

$$\overline{A} = 3\overline{a}_x - 2\overline{a}_y + \overline{a}_z\ ,\quad \overline{B} = -3\overline{a}_x - 3\overline{a}_y + 5\overline{a}_z\ ,\quad \overline{C} = 2\overline{a}_x + 6\overline{a}_y - 4\overline{a}_z$$

i) The vector from A to C is,

$$\overline{AC} = \overline{C} - \overline{A} = [2-3]\overline{a}_x + [6-(-2)]\ \overline{a}_y + [-4-1]\ \overline{a}_z$$

$$= -\overline{a}_x + 8\overline{a}_y - 5\overline{a}_z$$

ii) For unit vector from B to A, obtain distance vector $\overline{BA}$ first.

$$\therefore \quad \overline{BA} = \overline{A} - \overline{B} \quad \text{... as starting is B and terminating is A}$$

$$= [3-(-3)]\ \overline{a}_x + [(-2)-(-3)]\ \overline{a}_y + [1-5]\overline{a}_z$$

$$= 6\overline{a}_x + \overline{a}_y - 4\overline{a}_z$$

$$\therefore \quad |\overline{BA}| = \sqrt{(6)^2 + (1)^2 + (-4)^2} = 7.2801$$

$$\therefore\ \overline{a}_{BA} = \frac{\overline{BA}}{|\overline{BA}|} = \frac{6\overline{a}_x + \overline{a}_y - 4\overline{a}_z}{7.2801} = 0.8241\ \overline{a}_x + 0.1373\ \overline{a}_y - 0.5494\ \overline{a}_z$$

iii) For distance between B and C, obtain $\overline{BC}$

$$\overline{BC} = \overline{C} - \overline{B} = [2-(-3)]\ \overline{a}_x + [6-(-3)]\ \overline{a}_y + [(-4)-(5)]\ \overline{a}_z$$

$$= 5\overline{a}_x + 9\overline{a}_y - 9\overline{a}_z$$

$\therefore$ Distance BC $= \sqrt{(5)^2 + (9)^2 + (-9)^2} = 13.6747$

iv) Let $B(x_1, y_1, z_1)$ and $C(x_2, y_2, z_2)$ then the coordinates of midpoint of BC are $\left(\frac{x_1 + x_2}{2}, \frac{y_1 + y_2}{2}, \frac{z_1 + z_2}{2}\right)$.

$\therefore$ Midpoint of BC $= \left(\frac{-3+2}{2}, \frac{-3+6}{2}, \frac{5-4}{2}\right) = (-0.5, 1.5, 0.5)$

Hence the vector from A to this midpoint is

$$= [-0.5 - 3]\bar{a}_x + [1.5 - (-2)]\bar{a}_y + [0.5 - 1]\bar{a}_z$$

$$= -3.5\,\bar{a}_x + 3.5\,\bar{a}_y - 0.5\,\bar{a}_z$$

1.7 Cylindrical Coordinate System

The circular cylindrical coordinate system is the three dimensional version of polar coordinate system. The surfaces used to define the cylindrical coordinate system are,

1. Plane of constant z which is parallel to xy plane.

2. A cylinder of radius r with z axis as the axis of the cylinder.

3. A half plane perpendicular to xy plane and at an angle ϕ with respect to xz plane. The angle ϕ is called **azimuthal angle.**

The ranges of the variables are,

$$\boxed{\begin{aligned} &0 \le r \le \infty && \ldots (1) \\ &0 \le \phi \le 2\pi && \ldots (2) \\ &-\infty < z \le \infty && \ldots (3) \end{aligned}}$$

The point P in cylindrical coordinate system has three coordinates r, ϕ and z whose values lie in the respective ranges given by the equations (1), (2) and (3).

The point $P(r, \phi_1, z_1)$ can be shown as in the Fig. 1.17(b).

Key Point : *Note that angle ϕ is expressed in radians and for ϕ anticlockwise measurement is treated* ***positive*** *while* ***clockwise*** *measurement is treated* ***negative.***

The intersection of any two surfaces out of the above three surfaces is either a line or a circle and intersection of three surfaces defines a point P.

The intersection of z = constant and r = constant is a circle. The intersection of ϕ = constant and r = constant is a line. The point P which is intersection of all three surfaces is shown in the Fig. 1.19.

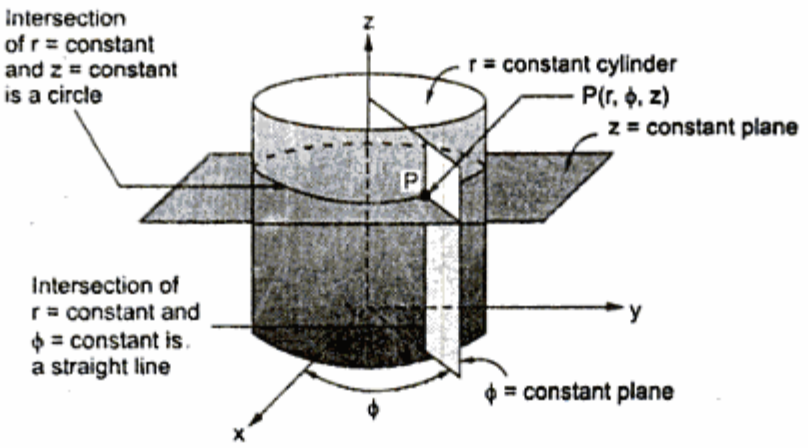

Fig. 1.19 Representing point P in cylindrical system

1.7.1 Base Vectors

Similar to cartesian coordinate system, there are three unit vectors in the r, ϕ and z directions denoted as $\bar{a}_r, \bar{a}_\phi$ and $\bar{a}_z$.

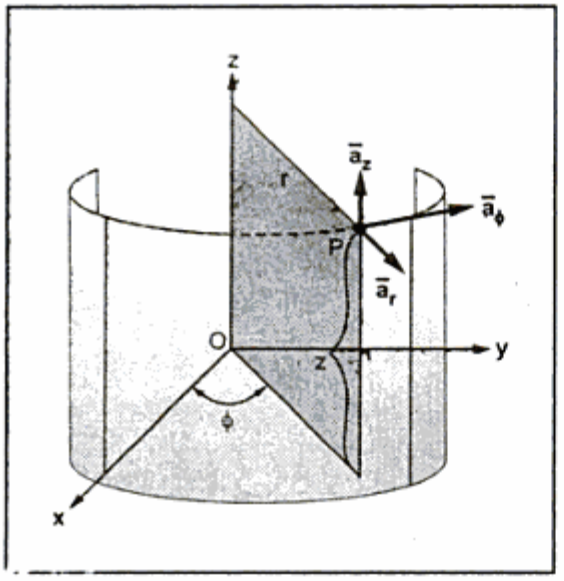

1.20 Unit vectors in cylindrical system

These unit vectors are shown in the Fig. 1.20.

These are mutually perpendicular to each other.

The $\bar{a}_r$ lies in a plane parallel to the xy plane and is perpendicular to the surface of the cylinder at a given point, coming radially outward.

The unit vector $\bar{a}_\phi$ lies also in a plane parallel to the xy plane but it is tangent to the cylinder and pointing in a direction of increasing ϕ, at the given point.

The unit vector $\bar{a}_z$ is parallel to z axis and directed towards increasing z.

Hence vector of point P can be represented as,

$$\bar{P} = P_r \bar{a}_r + P_\phi \bar{a}_\phi + P_z \bar{a}_z \quad \text{... (4)}$$

where P_r is radius r, P_ϕ is angle ϕ and P_z is z coordinate of point P.

Key Point : *In cartesian coordinate system, the unit vectors are not dependent on the coordinates. But in cylindrical coordinate system $\bar{a}_r$ and $\bar{a}_\phi$ are functions of ϕ coordinate as their directions change as ϕ changes. Hence in integration or differentiation with respect to ϕ $\bar{a}_r$ and $\bar{a}_\phi$ should not be treated to be constants.*

1.7.2 Differential Elements in Cylindrical Coordinate System

Consider a point $P(r,\phi,z)$ in a cylindrical coordinate system. Let each coordinate is increased by the differential amount. The differential increments in r,ϕ,z are dr, $d\phi$ and dz respectively.

Now there are two cylinders of radius r and $r+dr$. There are two radial planes at the angles ϕ and $\phi+d\phi$. And there are two horizontal planes at the heights z and $z+dz$. All these surfaces enclose a small volume as shown in the Fig. 1.21.

The differential lengths in r and z directions are dr and dz respectively. In ϕ direction, $d\phi$ is the change in angle ϕ and is not the differential length. Due to this change $d\phi$, there exists a differential arc length in ϕ direction. This differential length, due to $d\phi$, in ϕ direction is $r\,d\phi$ as shown in the Fig. 1.21.

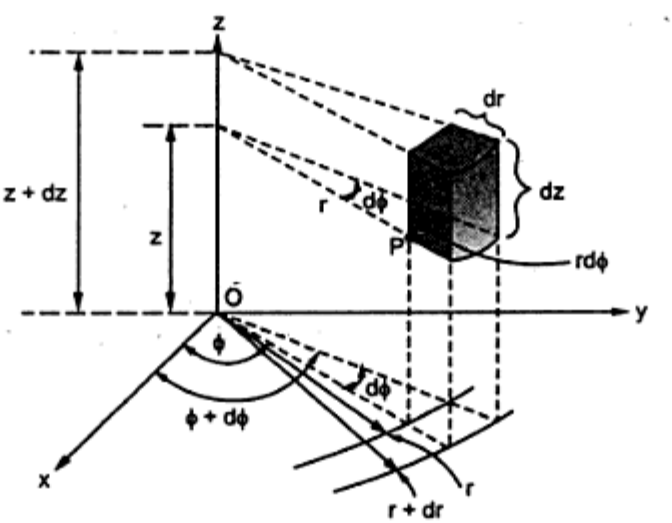

Fig. 1.21 Differential volume in cylindrical coordinate system

Thus the differential lengths are,

$$dr = \text{Differential length in r direction} \quad \text{... (5)}$$

$$r\,d\phi = \text{Differential length in } \phi \text{ direction} \quad \text{... (6)}$$

$$dz = \text{Differential length in z direction} \quad \text{... (7)}$$

Hence the **differential vector length** in cylindrical coordinate system is given by,

$$\boxed{\overline{dl} = dr\,\bar{a}_r + r\,d\phi\,\bar{a}_\phi + dz\,\bar{a}_z} \quad \text{... (8)}$$

The magnitude of the differential length vector is given by,

$$\boxed{|\overline{dl}| = \sqrt{(dr)^2 + (r\,d\phi)^2 + (dz)^2}} \quad \text{... (9)}$$

Hence the **differential volume** of the differential element formed is given by,

$$\boxed{dv = r\,dr\,d\phi\,dz} \quad \text{... (10)}$$

The **differential surface areas** in the three directions are shown in the Fig. 1.22.

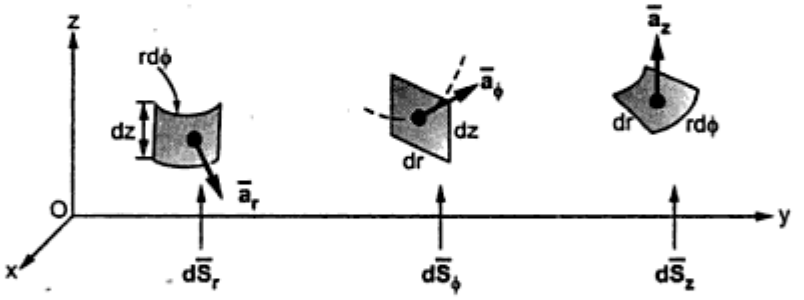

Fig. 1.22 Differential surface elements in cylindrical system

The vector representation of these differential surface areas are given by,

$d\bar{S}_r$ = Differential vector surface area normal to r direction

$$= r\,d\phi\,dz\,\bar{a}_r \quad \text{... (11)}$$

$d\bar{S}_\phi$ = Differential vector surface area normal to ϕ direction

$$= dr\,dz\,\bar{a}_\phi \quad \text{... (12)}$$

$d\bar{S}_z$ = Differential vector surface area normal to z direction

$$= r\,dr\,d\phi\,\bar{a}_z \quad \text{... (13)}$$

The unit vector $\bar{a}_\theta$ is tangent to the sphere and oriented in the direction of increasing θ. It is normal to the conical surface.

The third unit vector $\bar{a}_\phi$ is tangent to the sphere and also tangent to the conical surface. It is oriented in the direction of increasing ϕ. It is same as defined in the cylindrical coordinate system.

Hence vector of point P can be represented as,

$$\bar{P} = P_r\,\bar{a}_r + P_\theta\,\bar{a}_\theta + P_\phi\,\bar{a}_\phi \qquad \text{... (4)}$$

where P_r is the radius r and P_θ, P_ϕ are the two angle components of point P.

1.8.2 Differential Elements in Spherical Coordinate System

Consider a point $P(r,\theta,\phi)$ in a spherical coordinate system. Let each coordinate is increased by the differential amount. The differential increments in r, θ, ϕ are dr, dθ and dϕ.

Now there are two spheres of radius r and r + dr. There are two cones with half angles θ and θ + dθ. There are two planes at the angles ϕ and ϕ + dϕ measured from xz plane. All these surfaces enclose a small volume as shown in the Fig. 1.30.

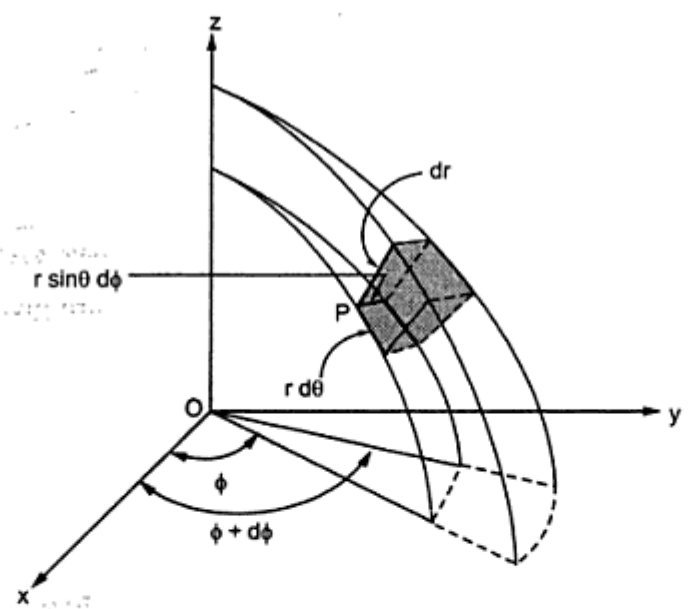

Fig. 1.30 Differential volume in spherical coordinate system

The differential length in r direction is dr. The differential length in ϕ direction is r sinθ dϕ. The differential length in θ direction is r dθ. Thus,

$$dr = \text{Differential length in r direction} \qquad \text{... (5)}$$

$$r\,d\theta = \text{Differential length in } \theta \text{ direction} \quad \text{... (6)}$$

$$r\sin\theta\,d\phi = \text{Differential length in } \phi \text{ direction} \quad \text{... (7)}$$

Hence the **differential vector length** in spherical coordinate system is given by,

$$\boxed{\overline{dl} = dr\,\bar{a}_r + r\,d\theta\,\bar{a}_\theta + r\sin\theta\,d\phi\,\bar{a}_\phi} \quad \text{... (8)}$$

the magnitude of the differential length vector is given by,

$$\boxed{\left|\overline{dl}\right| = \sqrt{(dr)^2 + (r\,d\theta)^2 + (r\sin\theta\,d\phi)^2}} \quad \text{... (9)}$$

Hence the **differential volume** of the differential element formed, in spherical coordinate system is given by,

$$\boxed{dv = r^2 \sin\theta\,dr\,d\theta\,d\phi} \quad \text{... (10)}$$

The **differential surface areas** in the three directions are shown in the Fig. 1.31.

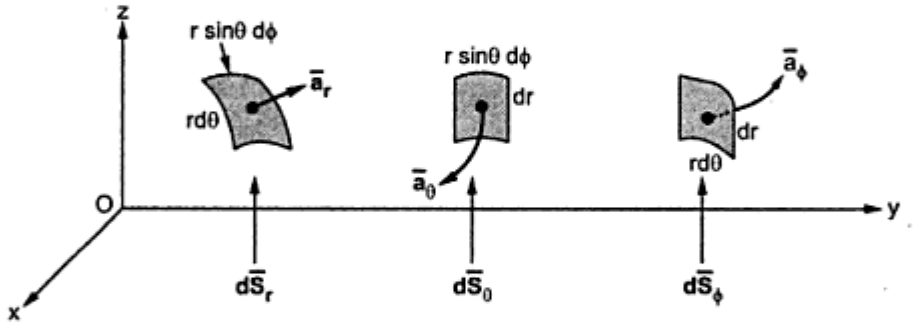

Fig. 1.31 Differential surface elements in spherical coordinate system

The vector representation of these differential surface areas are given by,

$d\bar{S}_r$ = Differential vector surface area normal to r direction

$$= r^2 \sin\theta\,d\theta\,d\phi \quad \text{... (11)}$$

$d\bar{S}_\theta$ = Differential vector surface area normal to θ direction

$$= r\sin\theta\,dr\,d\phi \quad \text{... (12)}$$

$d\bar{S}_\phi$ = Differential vector surface area normal to ϕ direction

$$= r\,dr\,d\theta \quad \text{... (13)}$$

1.8.3 Relationship between Cartesian and Spherical Systems

Consider a point P whose cartesian coordinates are x, y and z while the spherical coordinates are r, θ and ϕ as shown in the Fig. 1.32.

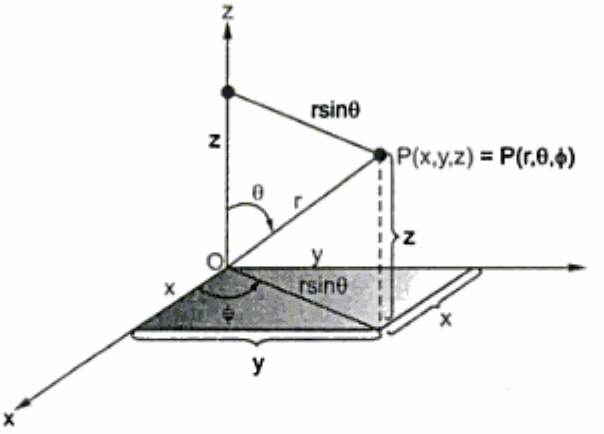

Fig. 1.32 Relationship between cartesian and spherical systems

Looking at the xy plane we can write,

$$x = r\sin\theta\cos\phi \quad \text{and} \quad y = r\sin\theta\sin\phi$$

While $\quad z = r\cos\theta$

Hence the transformation from spherical to cartesian can be obtained from the equations,

$$\boxed{x = r\sin\theta\cos\phi\,,\quad y = r\sin\theta\sin\phi \quad \text{and} \quad z = r\cos\theta} \qquad \text{... (14)}$$

Now r can be expressed as,

$$x^2 + y^2 + z^2 = r^2\sin^2\theta\cos^2\phi + r^2\sin^2\theta\sin^2\phi + r^2\cos^2\theta$$

$$= r^2\sin^2\theta\left[\sin^2\phi + \cos^2\phi\right] + r^2\cos^2\theta$$

$$= r^2\left[\sin^2\theta + \cos^2\theta\right] = r^2$$

$$r = \sqrt{x^2 + y^2 + z^2}$$

While $\tan\phi = \dfrac{y}{x}$ and $\cos\theta = \dfrac{z}{r}$

As r is known, θ can be obtained.

Thus the transformation from cartesian to spherical coordinate system can be obtained from the equations,

$$\boxed{r = \sqrt{x^2 + y^2 + z^2}\,,\quad \theta = \cos^{-1}\left[\frac{z}{\sqrt{x^2 + y^2 + z^2}}\right] \quad \text{and} \quad \phi = \tan^{-1}\frac{y}{x}} \qquad \text{... (15)}$$

Remember that r is positive and varies from 0 to ∞, θ varies from 0 to π radians i.e. 0° to 180° and ϕ varies from 0 to 2π radians i.e. 0° to 360°.

Key Point: *While using above formulae, care must be taken to place the angles θ and ϕ in the correct quadrants according to the signs of x, y and z.*

Ex. 1.6 *Calculate the volume of a sphere of radius R using integration.*

Sol. : The differential volume of a sphere is,

$$dv = r^2 \sin\theta \, dr \, d\theta \, d\phi$$

The limits for r are 0 to R, as sphere is of radius R.

The θ varies from 0 to π while ϕ varies from 0 to 2π

$$\therefore \quad v = \int_0^{2\pi}\int_0^{\pi}\int_0^{R} r^2 \sin\theta \, dr \, d\theta \, d\phi$$

$$= \int_0^{2\pi}\int_0^{\pi}\left[\frac{r^3}{3}\right]_0^R \sin\theta \, d\theta \, d\phi = \frac{R^3}{3}\int_0^{2\pi}[-\cos\theta]_0^{\pi} \, d\phi$$

$$= \frac{R^3}{3}[-\cos\pi-(-\cos 0)]\int_0^{2\pi} d\phi = \frac{R^3}{3}[-(-1)-(-1)][\phi]_0^{2\pi}$$

$$= \frac{R^3}{3}\times 2\times 2\pi = \frac{4}{3}\pi R^3$$

Ex. 1.7 *Calculate the surface area of a sphere of radius R, by integration.*

Sol. : Consider the differential surface area normal to the r direction which is,

$$dS_r = r^2 \sin\theta \, d\theta \, d\phi$$

Now the limits of ϕ are 0 to 2π while θ varies from 0 to π

$$\therefore \quad S_r = \int_0^{2\pi}\int_0^{\pi} r^2 \sin\theta \, d\theta \, d\phi$$

But note that **radius of sphere is constant**, given as $r = R$

$$S_r = R^2\int_0^{2\pi}\int_0^{\pi} \sin\theta \, d\theta \, d\phi = R^2[-\cos\theta]_0^{\pi} \, [\phi]_0^{2\pi}$$

$$= R^2 \times [-\cos\pi-(-\cos 0)]\times 2\pi = R^2[-(-1)-(-1)]2\pi$$

$$= 4\pi R^2$$

Ex. 1.8 *Use spherical coordinates and integrate to find the area of the region $0 \le \phi \le \alpha$ on the spherical shell of radius a. What is the area if $\alpha = 2\pi$?*

Sol. : Consider the spherical shell of radius a hence $r = a$ is constant.

Consider differential surface area normal to r direction which is radially outward.

$$dS_r = r^2 \sin\theta \, d\theta \, d\phi = a^2 \sin\theta \, d\theta \, d\phi \quad \text{... as } r = a$$

But ϕ is varying between 0 to α while for spherical shell θ varies from 0 to π.

$$\therefore \qquad S_r = a^2 \int_0^{\alpha} \int_0^{\pi} \sin\theta \, d\theta \, d\phi = a^2 [-\cos\theta]_0^{\pi} [\phi]_0^{\alpha}$$

$$= a^2 \cdot [-\cos\pi - (-\cos 0)]\alpha = 2a^2\alpha$$

So area of the region is $2a^2\alpha$.

If $\alpha = 2\pi$, the area of the region becomes $4\pi a^2$, as the shell becomes complete sphere of radius a when ϕ varies from 0 to 2π.

1.9 Vector Multiplication

Uptill now the addition, subtraction and multiplication by scalar to a vector is discussed. Let us discuss the multiplication of two or more vectors. The knowledge of vector multiplication allows us to transform the vectors from one coordinate system to other.

Consider two vectors $\overline{A}$ and $\overline{B}$. There are two types of products existing depending upon the result of the multiplication. These two types of products are,

1. Scalar or Dot product
2. Vector or Cross product

Let us discuss the characteristics of these two products.

1.10 Scalar or Dot Product of Vectors

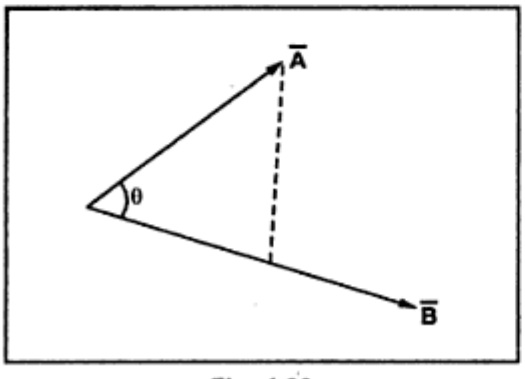

Fig. 1.33

The scalar or dot of the two vectors $\overline{A}$ and $\overline{B}$ is denoted as $\overline{A} \cdot \overline{B}$ and defined as the product of the magnitude of A, the magnitude of B and the cosine of the **smaller** angle between them.

It also can be defined as the product of magnitude of $\overline{B}$ and the projection of $\overline{A}$ onto $\overline{B}$ or viceversa.

Mathematically it is expressed as,

$$\boxed{\overline{A} \cdot \overline{B} = |\overline{A}|\,|\overline{B}| \cos\theta_{AB}} \quad \text{... (1)}$$

The result of such a dot product is **scalar** hence it is also called **scalar** product.

1.10.1 Properties of Dot Product

The various properties of the dot product are,

1. If the two vectors are parallel to each other i.e. $\theta = 0°$ then $\cos\theta_{AB} = 1$ thus

$$\overline{A} \cdot \overline{B} = |\overline{A}|\,|\overline{B}| \text{ for parallel vectors} \quad \text{... (2)}$$

2. If the two vectors are perpendicular to each other i.e. $\theta = 90°$ then $\cos\theta_{AB} = 0$ thus

$$\overline{A} \cdot \overline{B} = 0 \text{ for perpendicular vectors} \quad \text{... (3)}$$

In other words, if dot product of the two vectors is zero, the two vectors are perpendicular to each other.

3. The dot product obeys **commutative law,**

$$\therefore \quad \overline{A} \cdot \overline{B} = \overline{B} \cdot \overline{A} \quad \text{... (4)}$$

4. The dot product obeys **distributive law,**

$$\therefore \quad \overline{A} \cdot (\overline{B} + \overline{C}) = \overline{A} \cdot \overline{B} + \overline{A} \cdot \overline{C} \quad \text{... (5)}$$

5. If the dot product of vector with itself is performed, the result is square of the magnitude of that vector.

$$\overline{A} \cdot \overline{A} = |\overline{A}|\,|\overline{A}| \cos 0° = |\overline{A}|^2 \quad \text{... (6)}$$

6. Consider the unit vectors $\overline{a}_x$, $\overline{a}_y$ and $\overline{a}_z$ in cartesian coordinate system. All these vectors are mutually **perpendicular** to each other. Hence the dot product of different unit vectors is zero.

$$\overline{a}_x \cdot \overline{a}_y = \overline{a}_y \cdot \overline{a}_x = \overline{a}_x \cdot \overline{a}_z = \overline{a}_z \cdot \overline{a}_x = \overline{a}_y \cdot \overline{a}_z = \overline{a}_z \cdot \overline{a}_y = 0 \quad \text{... (7)}$$

7. Any unit vector dotted with itself is unity,

$$\overline{a}_x \cdot \overline{a}_x = \overline{a}_y \cdot \overline{a}_y = \overline{a}_z \cdot \overline{a}_z = 1 \quad \text{... (8)}$$

8. Consider two vectors in cartesian coordinate system,

$$\overline{A} = A_x \overline{a}_x + A_y \overline{a}_y + A_z \overline{a}_z \quad \text{and} \quad \overline{B} = B_x \overline{a}_x + B_y \overline{a}_y + B_z \overline{a}_z$$

Now $\overline{A} \cdot \overline{B} = (A_x \overline{a}_x + A_y \overline{a}_y + A_z \overline{a}_z) \cdot (B_x \overline{a}_x + B_y \overline{a}_y + B_z \overline{a}_z)$

This product has nine scalar terms as dot product obeys distributive law. But from the equation (7), six terms out of nine will be zero involving the dot products of different unit vectors. While the remaining three terms involve the unit vector dotted with itself, the result of which is unity.

$$\therefore \quad \overline{A} \cdot \overline{B} = A_x B_x (\overline{a}_x \cdot \overline{a}_x) + A_y B_y (\overline{a}_y \cdot \overline{a}_y) + A_z B_z (\overline{a}_z \cdot \overline{a}_z)$$

$$\therefore \quad \overline{A} \cdot \overline{B} = A_x B_x + A_y B_y + A_z B_z \qquad \text{... (9)}$$

1.10.2 Applications of Dot Product

The applications of dot product are,

1. To determine the angle between the two vectors.

The angle can be determined as,

$$\boxed{\theta = \cos^{-1}\left\{\frac{\overline{A} \cdot \overline{B}}{|\overline{A}|\ |\overline{B}|}\right\}}$$

2. To find the component of a vector in a given direction.

Consider a vector $\overline{P}$ and a unit vector $\overline{a}$ as shown in the Fig. 1.34. The **component** of vector $\overline{P}$ in the direction of unit vector $\overline{a}$ is $\overline{P} \cdot \overline{a}$. This is a scalar quantity. This is shown in the Fig. 1.34 (a).

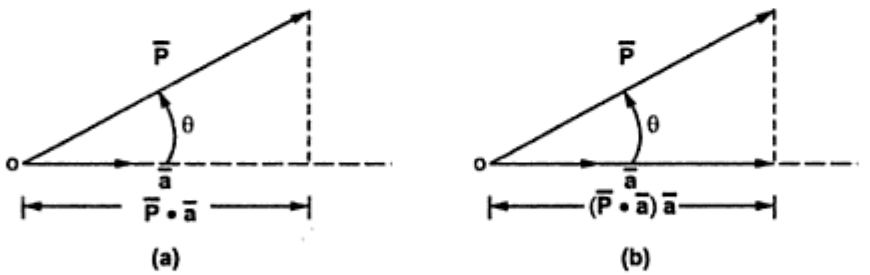

Fig. 1.34 (a & b)

$$\boxed{\overline{P} \cdot \overline{a} = |\overline{P}|\ |\overline{a}| \cos\theta = |\overline{P}| \cos\theta}$$

The sign of this component is positive if $0 \le \theta < 90°$ while the sign of this component is negative if $90° < \theta \le 180°$. If the **component vector** of $\overline{A}$ in the direction of unit vector $\overline{a}$ is required then multiply the component obtained by that unit vector, as shown in the Fig. 1.34 (b). Thus $(\overline{P} \cdot \overline{a})\,\overline{a}$ **is the component vector of** $\overline{P}$ **in the direction of** $\overline{a}$.

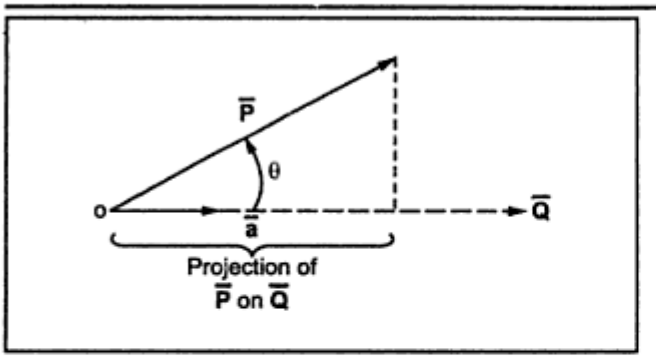

Fig. 1.34 (c)

Thus **component** of $\overline{P}$ in the direction of a_x is $\overline{P} \cdot \overline{a}_x$ i.e. P_x while the **component vector** of $\overline{P}$ in the direction of $\overline{a}_x$ is $P_x \overline{a}_x$.

This is the geometrical meaning of dot product, to find **projection** of $\overline{P}$ in the direction of unit vector $\overline{a}$.

If the projection of $\overline{P}$ on other vector $\overline{Q}$ is to be obtained then it is necessary to find unit vector in the direction of $\overline{Q}$ first i.e. $\overline{a}_Q$.

Then the projection of $\overline{P}$ on $\overline{Q}$ is given by $\overline{P} \cdot \overline{a}_Q$.

As $\overline{a}_Q = \dfrac{\overline{Q}}{|\overline{Q}|}$ then the projection of $\overline{P}$ on $\overline{Q}$ can be expressed as,

$$\overline{P} \cdot \frac{\overline{Q}}{|\overline{Q}|} = \frac{\overline{P} \cdot \overline{Q}}{|\overline{Q}|}$$

3. Physically, work done by a constant force can be expressed as a dot procut of two vectors.

Consider a constant force $\overline{F}$ acting on a body and it causes the displacement $\overline{d}$ of that body. Then the work done W is the product of the force and the component of the displacement in the direction of force which can be expressed as,

$$W = |\overline{F}| d \cos\theta = \overline{F} \cdot \overline{d}$$

But if the force applied varies along the path then the total work done is to be calculated by the integration of a dot product as,

$$W = \int \overline{F} \cdot \overline{dl}$$

Ex. 1.9 *Given the two vectors,*

$\overline{A} = 2\overline{a}_x - 5\overline{a}_y - 4\,\overline{a}_z$ *and* $\overline{B} = 3\overline{a}_x + 5\overline{a}_y + 2\overline{a}_z$

Find the dot product and the angle between the two vectors.

Sol. : The dot product is,

$$\overline{A} \cdot \overline{B} = A_x B_x + A_y B_y + A_z B_z = (2 \times 3) + (-5)(5) + (-4)(2)$$

$$= 6 - 25 - 8 = -27$$

$$\bar{a}_z \times \bar{a}_x = \bar{a}_y \quad \text{... (9)}$$

But if the order of unit vectors is reversed, the result is negative of the remaining third unit vector. Thus,

$$\bar{a}_y \times \bar{a}_x = -\bar{a}_z, \quad \bar{a}_z \times \bar{a}_y = -\bar{a}_x, \quad \bar{a}_x \times \bar{a}_z = -\bar{a}_y \quad \text{... (10)}$$

This can be remembered by a circle indicating cyclic permutations of cross products of unit vectors as shown in the Fig. 1.38.

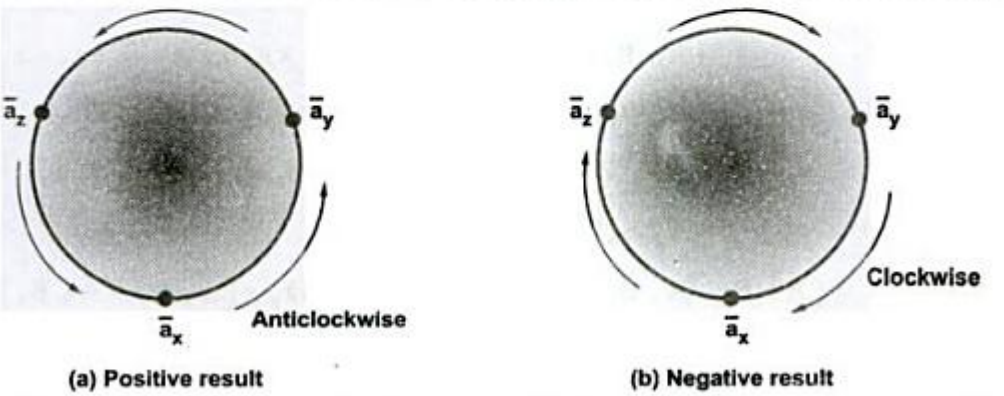

Fig. 1.38

While as cross product of vector with itself is zero we can write,

$$\bar{a}_x \times \bar{a}_x = \bar{a}_y \times \bar{a}_y = \bar{a}_z \times \bar{a}_z = 0 \quad \text{... (11)}$$

The result is applicable for the unit vectors in the remaining two coordinate systems.

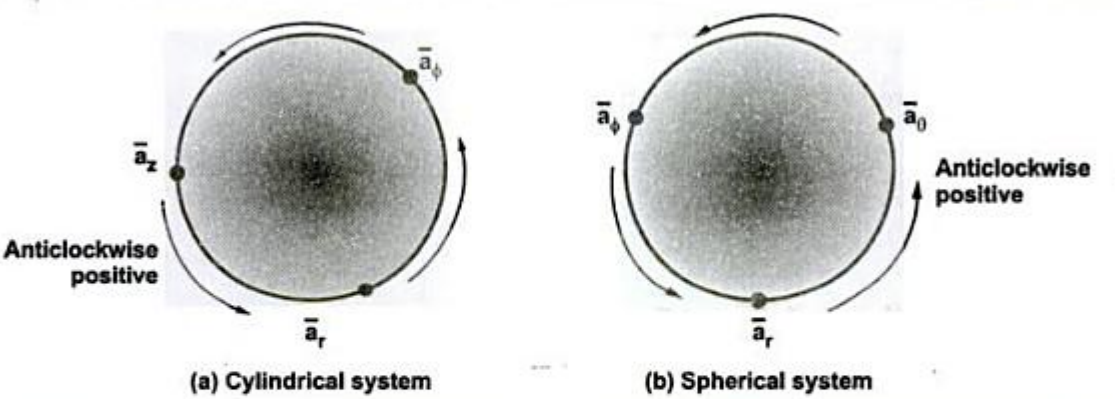

Fig. 1.39

From the Fig. 1.39 we can write,

$\bar{a}_r \times \bar{a}_\phi = \bar{a}_z, \quad \bar{a}_\theta \times \bar{a}_\phi = \bar{a}_r$ and so on.

Key Point: *The clockwise direction gives negative result.*

8. **Cross product in determinant form :** Consider the two vectors in the cartesian system as,

$$\overline{A} = A_x \overline{a}_x + A_y \overline{a}_y + A_z \overline{a}_z \text{ and } \overline{B} = B_x \overline{a}_x + B_y \overline{a}_y + B_z \overline{a}_z$$

Then the cross product of the two vectors is,

$$\begin{aligned}
\overline{A} \times \overline{B} &= A_x B_x (\overline{a}_x \times \overline{a}_x) + A_x B_y (\overline{a}_x \times \overline{a}_y) + A_x B_z (\overline{a}_x \times \overline{a}_z) \\
&\quad + A_y B_x (\overline{a}_y \times \overline{a}_x) + A_y B_y (\overline{a}_y \times \overline{a}_y) + A_x B_z (\overline{a}_y \times \overline{a}_z) \\
&\quad + A_z B_x (\overline{a}_z \times \overline{a}_x) + A_z B_y (\overline{a}_z \times \overline{a}_y) + A_z B_z (\overline{a}_z \times \overline{a}_z) \\
&= 0 + A_x B_y \overline{a}_z - A_x B_z \overline{a}_y - A_y B_x \overline{a}_z + 0 + A_y B_z \overline{a}_x \\
&\quad + A_z B_x \overline{a}_y - A_z B_y \overline{a}_x + 0 \\
&= (A_y B_z - A_z B_y)\overline{a}_x + (A_z B_x - A_x B_z)\overline{a}_y + (A_x B_y - A_y B_x)\overline{a}_z
\end{aligned}$$

This result can be expressed in determinant form as,

$$\overline{A} \times \overline{B} = \begin{vmatrix} \overline{a}_x & \overline{a}_y & \overline{a}_z \\ A_x & A_y & A_z \\ B_x & B_y & B_z \end{vmatrix} \qquad \text{... (12(a))}$$

If $\overline{A}$ and $\overline{B}$ are in cylindrical system then

$$\overline{A} \times \overline{B} = \begin{vmatrix} \overline{a}_r & \overline{a}_\phi & \overline{a}_z \\ A_r & A_\phi & A_z \\ B_r & B_\phi & B_z \end{vmatrix} \qquad \text{... (12(b))}$$

If $\overline{A}$ and $\overline{B}$ are in spherical system then

$$\overline{A} \times \overline{B} = \begin{vmatrix} \overline{a}_r & \overline{a}_\theta & \overline{a}_\phi \\ A_r & A_\theta & A_\phi \\ B_r & B_\theta & B_\phi \end{vmatrix} \qquad \text{... (12(c))}$$

1.11.2 Applications of Cross Product

The different applications of cross product are,

1. The cross product is the replacement to the right hand rule used in electrical engineering to determine the direction of force experienced by current carrying conductor placed in a magnetic field.

Thus if I is the current flowing through conductor while $\overline{L}$ is the vector length considered to indicate the direction of current through the conductor. The uniform magnetic flux density is denoted by vector $\overline{B}$. Then the force experienced by conductor is given by,

$$\overline{F} = I\overline{L} \times \overline{B}$$

2. Another physical quantity which can be represented by cross product is **moment of a force.** The moment of a force (or torque) acting on a rigid body, which can rotate about an axis perpendicular to a plane containing the force is defined to be the magnitude of the force multiplied by the perpendicular distance from the force to the axis. This is shown in the Fig. 1.40.

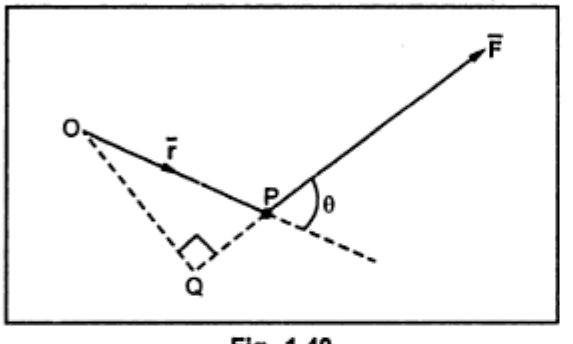

Fig. 1.40

The moment of force $\overline{F}$ about a point O is $\overline{M}$. Its magnitude is $|\overline{F}|\ |\overline{r}|\ \sin\theta$ where $|\overline{r}|\ \sin\theta$ is the perpendicular distance of $\overline{F}$ from O i.e. OQ.

$\therefore \overline{M} = \overline{r} \times \overline{F} = |\overline{r}|\ |\overline{F}|\ \sin\theta\ \overline{a}_N$ where $\overline{a}_N$ is the unit vector indicating direction of $\overline{M}$ which is perpendicular to the plane i.e. paper and coming out of paper according to right hand screw rule.

Ex. 1.11 *Given the two coplanar vectors*

$\overline{A} = 3\overline{a}_x + 4\overline{a}_y - 5\overline{a}_z$ *and* $\overline{B} = -6\overline{a}_x + 2\overline{a}_y + 4\overline{a}_z$

Obtain the unit vector normal to the plane containing the vectors $\overline{A}$ *and* $\overline{B}$.

Sol. : Note that the unit vector normal to the plane containing the vectors $\overline{A}$ and $\overline{B}$ is the unit vector in the direction of cross product of $\overline{A}$ and $\overline{B}$.

Now
$$\overline{A} \times \overline{B} = \begin{vmatrix} \overline{a}_x & \overline{a}_y & \overline{a}_z \\ 3 & 4 & -5 \\ -6 & 2 & 4 \end{vmatrix}$$

$$= \overline{a}_x \begin{vmatrix} 4 & -5 \\ 2 & 4 \end{vmatrix} - \overline{a}_y \begin{vmatrix} 3 & -5 \\ -6 & 4 \end{vmatrix} + \overline{a}_z \begin{vmatrix} 3 & 4 \\ -6 & 2 \end{vmatrix}$$

$$= 26\overline{a}_x + 18\overline{a}_y + 30\overline{a}_z$$

$$\therefore \quad \overline{a}_N = \frac{\overline{A} \times \overline{B}}{|\overline{A} \times \overline{B}|} = \frac{26\overline{a}_x - 18\overline{a}_y + 30\overline{a}_z}{\sqrt{(26)^2 + (18)^2 + (30)^2}}$$

$$= 0.5964\ \overline{a}_x + 0.4129\ \overline{a}_y + 0.6882\ \overline{a}_z$$

This is the unit vector normal to the plane containing $\overline{A}$ and $\overline{B}$.

1.12 Products of Three Vectors

Let $\overline{A}, \overline{B}$ and $\overline{C}$ are the three given vectors. Then the product of these three vectors is classified in two ways called,

1. Scalar triple product
2. Vector triple product

1.12.1 Scalar Triple Product

The scalar triple product of the three vectors $\overline{A}, \overline{B}$ and $\overline{C}$ is mathematically defined as,

$$\boxed{\overline{A}\cdot(\overline{B}\times\overline{C}) = \overline{B}\cdot(\overline{C}\times\overline{A}) = \overline{C}\cdot(\overline{A}\times\overline{B})} \quad \text{... (1)}$$

Thus if,

$$\overline{A} = A_x\,\overline{a}_x + A_y\,\overline{a}_y + A_z\,\overline{a}_z$$

$$\overline{B} = B_x\,\overline{a}_x + B_y\,\overline{a}_y + B_z\,\overline{a}_z$$

$$\overline{C} = C_x\,\overline{a}_x + C_y\,\overline{a}_y + C_z\,\overline{a}_z$$

then the scalar triple product is obtained by the determinant,

$$\overline{A}\cdot(\overline{B}\times\overline{C}) = \begin{vmatrix} A_x & A_y & A_z \\ B_x & B_y & B_z \\ C_x & C_y & C_z \end{vmatrix} \quad \text{... (2)}$$

The result of this product is a scalar and hence the product is called scalar triple product. The cyclic order a b c is important.

1.12.1.1 Characteristics of Scalar Triple Product

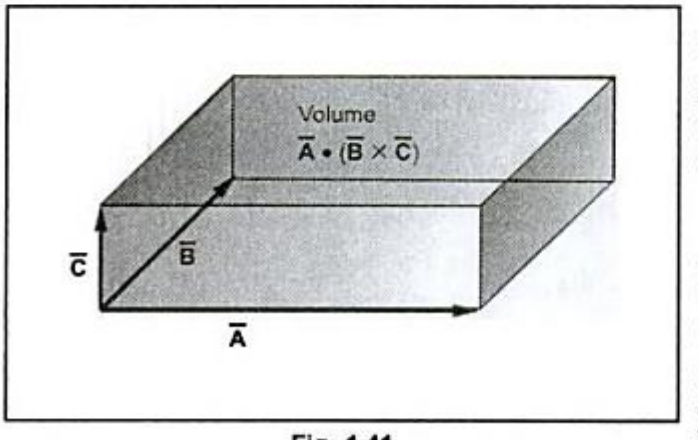

Fig. 1.41

1. The scalar triple product represents the volume of the parallelepiped with edges $\overline{A}, \overline{B}$ and $\overline{C}$, drawn from the same origin, as shown in the Fig. 1.41.

2. The scalar triple product depends only on the cyclic order 'a b c' and not on the position of the • and ✕ in the product. If the cyclic order is broken by permuting two of the vectors, the sign is reversed.

$$\therefore \quad \overline{A}\cdot(\overline{B}\times\overline{C}) = -\overline{B}\cdot(\overline{A}\times\overline{C})$$

3. If two of the three vectors are equal then the result of the scalar triple product is zero.

$$\therefore \quad \overline{A} \cdot (\overline{A} \times \overline{C}) = 0$$

4. The scalar triple product is distributive.

1.12.2 Vector Triple Product

The vector triple product of the three vectors $\overline{A}, \overline{B}$ and $\overline{C}$ is mathematically defined as,

$$\boxed{\overline{A} \times (\overline{B} \times \overline{C}) = \overline{B}(\overline{A} \cdot \overline{C}) - \overline{C}(\overline{A} \cdot \overline{B})} \quad \text{... (3)}$$

The rule can be remembered as 'bac-cab' rule. The above rule can be easily proved by writing the cartensian components of each term in the equation. The position of the brackets is very important.

1.12.2.1 Characteristics of Vector Triple Product

1. It must be noted that in the vector triple product,

$$(\overline{A} \cdot \overline{B})\overline{C} \neq \overline{A}(\overline{B} \cdot \overline{C})$$

but $$(\overline{A} \cdot \overline{B})\overline{C} = \overline{C}(\overline{A} \cdot \overline{B})$$

This is because $\overline{A} \cdot \overline{B}$ is a scalar and multiplication by scalar to a vector is commutative.

2. From the basic definition we can write,

$$\overline{B} \times (\overline{C} \times \overline{A}) = \overline{C}(\overline{B} \cdot \overline{A}) - \overline{A}(\overline{B} \cdot \overline{C}) \quad \text{... (4)}$$

$$\overline{C} \times (\overline{A} \times \overline{B}) = \overline{A}(\overline{C} \cdot \overline{B}) - \overline{B}(\overline{C} \cdot \overline{A}) \quad \text{... (5)}$$

But dot product is commutative hence $\overline{C} \cdot \overline{A} = \overline{A} \cdot \overline{C}$ and so on. Hence addition of (3), (4) and (5) is zero.

$$\therefore \overline{A} \times (\overline{B} \times \overline{C}) + \overline{B} \times (\overline{C} \times \overline{A}) + \overline{C} \times (\overline{A} \times \overline{B}) = 0 \quad \text{... (6)}$$

The result of the vector triple product is a vector.

Ex. 1.12 *The three fields are given by,*

$$\overline{A} = 2\overline{a}_x - \overline{a}_z, \quad \overline{B} = 2\overline{a}_x - \overline{a}_y + 2\overline{a}_z, \quad \overline{C} = 2\overline{a}_x - 3\overline{a}_y + \overline{a}_z$$

Find the scalar and vector triple product.

Sol. : The scalar triple product is,

$$\overline{A} \cdot (\overline{B} \times \overline{C}) = \begin{vmatrix} 2 & 0 & -1 \\ 2 & -1 & 2 \\ 2 & -3 & 1 \end{vmatrix} = 14$$

The vector triple product is,

$$\overline{A}\times\left(\overline{B}\times\overline{C}\right) = \overline{B}\left(\overline{A}\cdot\overline{C}\right)-\overline{C}\left(\overline{A}\cdot\overline{B}\right)$$

$$\overline{A}\cdot\overline{C} = (2)(2)+(0)(-3)+(-1)(1) = 3$$

$$\overline{A}\cdot\overline{B} = (2)(2)+(0)(-1)+(-1)(2) = 2$$

$$\therefore \quad \overline{A}\times\left(\overline{B}\times\overline{C}\right) = 3\overline{B}-2\overline{C} = 3\left[2\overline{a}_x-\overline{a}_y+2\overline{a}_z\right]-2\left[2\overline{a}_x-3\overline{a}_y+\overline{a}_z\right]$$

$$= 2\overline{a}_x+3\overline{a}_y+4\overline{a}_z$$

1.13 Transformation of Vectors

Getting familiar with the dot product and cross product, it is possible now to transform the vectors from one cordinate system to other coordinate system.

1.13.1 Transformation of Vectors from Cartesian to Cylindrical

Consider a vector $\overline{A}$ in cartesian coordinate system as,

$$\overline{A} = A_x\overline{a}_x+A_y\overline{a}_y+A_z\overline{a}_z \quad \text{... (1)}$$

While the same vector in cylindrical coordinate system can be represented as,

$$\overline{A} = A_r\overline{a}_r+A_\phi\overline{a}_\phi+A_z\overline{a}_z \quad \text{... (2)}$$

From the dot product it is known that the component of vector in the direction of any unit vector is its dot product with that unit vector. Hence the component of $\overline{A}$ in the direction $\overline{a}_r$ is the dot product of $\overline{A}$ with $\overline{a}_r$. This component is nothing but A_r.

$$\therefore \quad A_r = \left[\overline{A}\cdot\overline{a}_r\right] \quad \text{... (3)}$$

$$\therefore \quad A_r = \left[A_x\overline{a}_x+A_y\overline{a}_y+A_z\overline{a}_z\right]\cdot\overline{a}_r$$

$$\therefore \quad A_r = A_x\overline{a}_x\cdot\overline{a}_r+A_y\overline{a}_y\cdot\overline{a}_r+A_z\overline{a}_z\cdot\overline{a}_r \quad \text{... (4)}$$

The magnitudes of all unit vectors is unity hence it is necessary to find angle between the unit vectors to obtain the various dot products.

The Fig. 1.42 (a) shows three dimensional view of various unit vectors.

Consider a xy plane in which the angles between the unit vectors are shown, as in the Fig. 1.42 (b).

The angle between $\overline{a}_x$ and $\overline{a}_r$ is ϕ.

The angle between $\overline{a}_y$ and $\overline{a}_r$ is $90-\phi$.

The angle between $\overline{a}_x$ and $\overline{a}_\phi$ is $90+\phi$.

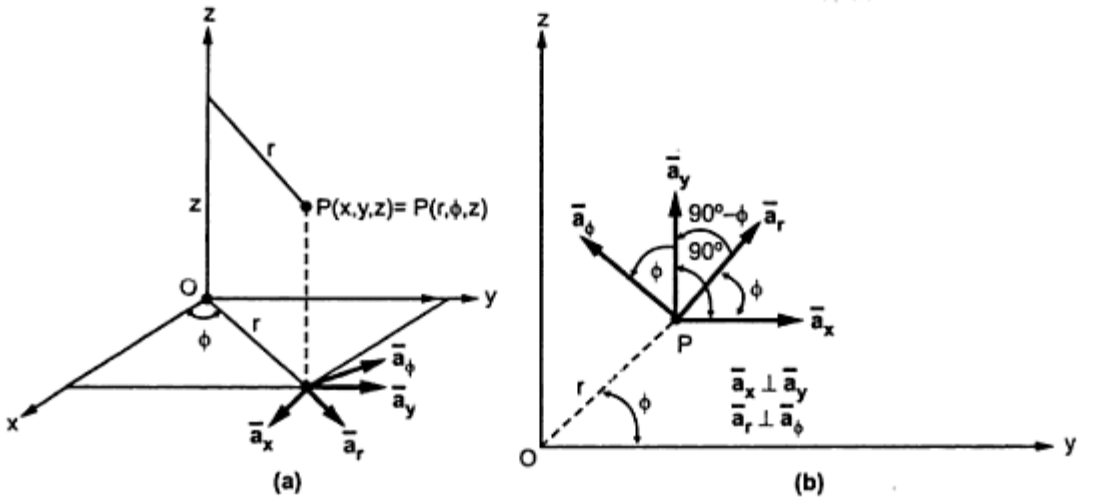

Fig. 1.42 Transformation of vectors

The angle between $\bar{a}_y$ and $\bar{a}_\phi$ is ϕ.

$$\therefore \quad \bar{a}_x \cdot \bar{a}_r = (1)(1)\cos(\phi) = \cos\phi \quad \text{... (5)}$$

$$\therefore \quad \bar{a}_x \cdot \bar{a}_\phi = (1)(1)\cos(90+\phi) = -\sin\phi \quad \text{... (6)}$$

$$\therefore \quad \bar{a}_y \cdot \bar{a}_r = (1)(1)\cos(90-\phi) = \sin\phi \quad \text{... (7)}$$

$$\therefore \quad \bar{a}_y \cdot \bar{a}_\phi = (1)(1)\cos(\phi) = \cos\phi \quad \text{... (8)}$$

and $\bar{a}_z \cdot \bar{a}_r = \bar{a}_z \cdot \bar{a}_\phi = 0$ as $\bar{a}_z$ is perpendicular to $\bar{a}_r$ and $\bar{a}_\phi$ ... (9)

and $\bar{a}_z \cdot \bar{a}_z = 1$ ... (10)

Substituting in (4) we get,

$$A_r = A_x \cos\phi + A_y \sin\phi \quad \text{... (11)}$$

Similarly finding A_ϕ as $\left[\bar{A} \cdot \bar{a}_\phi\right]$ and A_z as $\left[\bar{A} \cdot \bar{a}_z\right]$ we get,

$$A_\phi = -A_x \sin\phi + A_y \cos\phi \quad \text{... (12)}$$

and

$$A_z = A_z \quad \text{... (13)}$$

The results of dot product are summarized in the tabular form as,

Dot operator •	$\bar{a}_r$	$\bar{a}_\phi$	$\bar{a}_z$
$\bar{a}_x$	$\cos\phi$	$-\sin\phi$	0
$\bar{a}_y$	$\sin\phi$	$\cos\phi$	0
$\bar{a}_z$	0	0	1

Table 1.2

The results of transformations can be expressed in the matrix form as,

$$\begin{bmatrix} A_r \\ A_\phi \\ A_z \end{bmatrix} = \begin{bmatrix} \cos\phi & \sin\phi & 0 \\ -\sin\phi & \cos\phi & 0 \\ 0 & 0 & 1 \end{bmatrix} \begin{bmatrix} A_x \\ A_y \\ A_z \end{bmatrix}$$

1.13.2 Transformation of Vectors from Cylindrical to Cartesian

Now it is necessary to find the transformation from cylindrical to cartesian hence assume $\overline{A}$ is known in cylindrical system. Thus component of $\overline{A}$ in $\overline{a}_x$ direction is given by,

$$\overline{A}_x = \left[\overline{A} \cdot \overline{a}_x\right] = \left[A_r \overline{a}_r + A_\phi \overline{a}_\phi + A_z \overline{a}_z\right] \cdot \overline{a}_x$$

$$\therefore \quad A_x = A_r \overline{a}_r \cdot \overline{a}_x + A_\phi \overline{a}_\phi \cdot \overline{a}_x + A_z \overline{a}_z \cdot \overline{a}_x \quad \text{... (14)}$$

As dot product is commutative $\overline{a}_r \cdot \overline{a}_x = \overline{a}_x \cdot \overline{a}_r = \cos\phi$ and so on. Hence referring Table 1.2 we can write the results directly as,

$$A_x = A_r \cos\phi - A_\phi \sin\phi \quad \text{... (15)}$$

$$A_y = A_r \sin\phi + A_\phi \cos\phi \quad \text{... (16)}$$

$$A_z = A_z \quad \text{... (17)}$$

The result can be summarized in the matrix form as,

$$\begin{bmatrix} A_x \\ A_y \\ A_z \end{bmatrix} = \begin{bmatrix} \cos\phi & -\sin\phi & 0 \\ \sin\phi & \cos\phi & 0 \\ 0 & 0 & 1 \end{bmatrix} \begin{bmatrix} A_r \\ A_\phi \\ A_z \end{bmatrix}$$

Ex. 1.13 *Transform the vector field $\overline{W} = 10\overline{a}_x - 8\overline{a}_y + 6\overline{a}_z$ to cylindrical coordinate system, at point $P(10, -8, 6)$.*

Sol. : From the given field $\overline{W}$,

$W_x = 10$, $W_y = -8$ and $W_z = 6$

Now
$$W_r = \overline{W} \cdot \overline{a}_r = \left[10\overline{a}_x - 8\overline{a}_y + 6\overline{a}_z\right] \cdot \overline{a}_r$$

$$= 10\overline{a}_x \cdot \overline{a}_r - 8\overline{a}_y \cdot \overline{a}_r + 6\overline{a}_z \cdot \overline{a}_r$$

$$= 10(\cos\phi) - 8(\sin\phi) + 6(0) \quad \text{... Refer Table 1.2}$$

For point P, $x = 10$ and $y = -8$

$$\therefore \quad \phi = \tan^{-1}\frac{y}{x} \quad \text{... Relation between cartesian and cylindrical}$$

$$= \tan^{-1}\left[\frac{-8}{10}\right] = -38.6598°$$

As y is negative and x is positive, ϕ is in fourth quadrant. Hence ϕ calculated is correct.

$$\therefore \quad \cos\phi = 0.7808 \quad \text{and} \quad \sin\phi = -0.6246$$

$$\therefore \quad W_r = 10\times(0.7808) - 8\times(-0.6246) = 12.804$$

Now
$$W_\phi = \overline{W}\cdot\bar{a}_\phi = 10\bar{a}_x\cdot\bar{a}_\phi - 8\bar{a}_y\cdot\bar{a}_\phi + 6\bar{a}_z\cdot\bar{a}_\phi$$
$$= 10(-\sin\phi) - 8\cos\phi + 0 = 0$$

And
$$W_z = \overline{W}\cdot\bar{a}_z = 10\bar{a}_x\cdot\bar{a}_z - 8\bar{a}_y\cdot\bar{a}_z + 6\bar{a}_z\cdot\bar{a}_z$$
$$= 10\times 0 - 8\times 0 + 6\times 1 = 6$$

$$\therefore \quad \overline{W} = 12.804\,\bar{a}_r + 6\bar{a}_z \quad \text{in cylindrical system.}$$

Ex. 1.14 *Give the cartesian coordinates of the vector field* $\overline{H} = 20\bar{a}_r - 10\bar{a}_\phi + 3\bar{a}_z$, *at point* $P(x=5, y=2, z=-1)$.

Sol. : The given vector is in cylindrical system.

$$\therefore \quad H_x = \overline{H}\cdot\bar{a}_x = 20\bar{a}_r\cdot\bar{a}_x - 10\bar{a}_\phi\cdot\bar{a}_x + 3\bar{a}_z\cdot\bar{a}_x$$
$$= 20\cos\phi - 10(-\sin\phi) + 0 \qquad \text{... Refer Table 1.2}$$

At point P, $x = 5$, $y = 2$ and $z = -1$

Now
$$\phi = \tan^{-1}\frac{y}{x} = \tan^{-1}\frac{2}{5} = 21.8014°$$

$$\therefore \quad \cos\phi = 0.9284 \quad \text{and} \quad \sin\phi = 0.3714$$

$$\therefore \quad H_x = 20\times(0.9284) + 10\times 0.3714 = 22.282$$

Then
$$H_y = \overline{H}\cdot\bar{a}_y = 20\bar{a}_r\cdot\bar{a}_y - 10\bar{a}_\phi\cdot\bar{a}_y + 3\bar{a}_z\cdot\bar{a}_y$$
$$= 20\sin\phi - 10\cos\phi + 0$$
$$= 20\times(0.3714) - 10\times(0.9284) = -1.856$$

And
$$H_z = \overline{H}\cdot\bar{a}_z = 20\bar{a}_r\cdot\bar{a}_z - 10\bar{a}_\phi\cdot\bar{a}_z + 3\bar{a}_z\cdot\bar{a}_z$$
$$= 20\times 0 - 10\times 0 + 3\times 1 = 3$$

$$\therefore \quad \overline{H} = 22.282\,\bar{a}_x - 1.856\,\bar{a}_y + 3\,\bar{a}_z \quad \text{in cartesian system.}$$

1.13.3 Transformation of Vectors from Cartesian to Spherical

Let the vector $\overline{A}$ expressed in the cartesian system as,

$$\overline{A} = A_x\bar{a}_x + A_y\bar{a}_y + A_z\bar{a}_z$$

It is required to transform it into spherical system. The component of $\overline{A}$ in $\bar{a}_r$ direction is given by,

$$A_r = \overline{A} \cdot \bar{a}_r = \left[A_x \bar{a}_x + A_y \bar{a}_y + A_z \bar{a}_z\right] \cdot \bar{a}_r$$

$$= A_x \bar{a}_x \cdot \bar{a}_r + A_y \bar{a}_y \cdot \bar{a}_r + A_z \bar{a}_z \cdot \bar{a}_r \quad \text{... (18)}$$

Note : Though the radius representation r used in cylindrical and spherical systems is same, the directions $\bar{a}_r$ in both the systems are different. Infact many times r is represented as ρ in cylindrical system. But ρ is used to represent other quantity in this book hence r is used in cylindrical system. **Hence $\bar{a}_x \cdot \bar{a}_r$ will be different when $\bar{a}_r$ is of spherical system than the $\bar{a}_r$ of cylindrical system** and so on.

While $$A_\theta = \overline{A} \cdot \bar{a}_\theta = \left[A_x \bar{a}_x + A_y \bar{a}_y + A_z \bar{a}_z\right] \cdot \bar{a}_\theta$$

$$= A_x \bar{a}_x \cdot \bar{a}_\theta + A_y \bar{a}_y \cdot \bar{a}_\theta + A_z \bar{a}_z \cdot \bar{a}_\theta \quad \text{... (19)}$$

And $$A_\phi = \overline{A} \cdot \bar{a}_\phi = \left[A_x \bar{a}_x + A_y \bar{a}_y + A_z \bar{a}_z\right] \cdot \bar{a}_\phi$$

$$= A_x \bar{a}_x \cdot \bar{a}_\phi + A_y \bar{a}_y \cdot \bar{a}_\phi + A_z \bar{a}_z \cdot \bar{a}_\phi \quad \text{... (20)}$$

The dot products can be obtained by first taking the projection of spherical unit vector on the xy plane and then taking the projection onto the desired axis. Thus for $\bar{a}_x \cdot \bar{a}_r$, project $\bar{a}_r$ on the xy plane which is $\sin\theta$ and then project on the x axis which is $\sin\theta\cos\phi$.

$$\therefore \quad \bar{a}_x \cdot \bar{a}_r = \bar{a}_r \cdot \bar{a}_x = \sin\theta\cos\phi$$

In the similar fashion the other dot products can be obtained. The results of the dot products are summarized in the Table 1.3.

Dot operator •	$\bar{a}_r$	$\bar{a}_\theta$	$\bar{a}_\phi$
$\bar{a}_x$	$\sin\theta\cos\phi$	$\cos\theta\cos\phi$	$-\sin\phi$
$\bar{a}_y$	$\sin\theta\sin\phi$	$\cos\theta\sin\phi$	$\cos\phi$
$\bar{a}_z$	$\cos\theta$	$-\sin\theta$	0

Table 1.3

Using the results of Table 1.3, the results of vector transformation from cartesian to spherical can be summarized in the matrix form as,

$$\begin{bmatrix} A_r \\ A_\theta \\ A_\phi \end{bmatrix} = \begin{bmatrix} \sin\theta\cos\phi & \sin\theta\sin\phi & \cos\theta \\ \cos\theta\cos\phi & \cos\theta\sin\phi & -\sin\theta \\ -\sin\phi & \cos\phi & 0 \end{bmatrix} \begin{bmatrix} A_x \\ A_y \\ A_z \end{bmatrix}$$

1.13.4 Transformation of Vectors from Spherical to Cartesian

To find the reverse transformation, assume that the $\overline{A}$ is known in spherical system as,

$$\overline{A} = A_r \overline{a}_r + A_\theta \overline{a}_\theta + A_\phi \overline{a}_\phi$$

Hence component of $\overline{A}$ in $\overline{a}_x, \overline{a}_y$ and $\overline{a}_z$ are given by $\overline{A} \cdot \overline{a}_x$, $\overline{A} \cdot \overline{a}_y$ and $\overline{A} \cdot \overline{a}_z$ respectively.

Thus we get the results as,

$$A_x = A_r \overline{a}_r \cdot \overline{a}_x + A_\theta \overline{a}_\theta \cdot \overline{a}_x + A_\phi \overline{a}_\phi \cdot \overline{a}_x \quad \text{... (21)}$$

$$A_y = A_r \overline{a}_r \cdot \overline{a}_y + A_\theta \overline{a}_\theta \cdot \overline{a}_y + A_\phi \overline{a}_\phi \cdot \overline{a}_y \quad \text{... (22)}$$

$$A_z = A_r \overline{a}_r \cdot \overline{a}_z + A_\theta \overline{a}_\theta \cdot \overline{a}_z + A_\phi \overline{a}_\phi \cdot \overline{a}_z \quad \text{... (23)}$$

Using the Table 1.3, the results can be expressed in the matrix form as,

$$\begin{bmatrix} A_x \\ A_y \\ A_z \end{bmatrix} = \begin{bmatrix} \sin\theta\cos\phi & \cos\theta\cos\phi & -\sin\phi \\ \sin\theta\sin\phi & \cos\theta\sin\phi & \cos\phi \\ \cos\theta & -\sin\theta & 0 \end{bmatrix} \begin{bmatrix} A_r \\ A_\theta \\ A_\phi \end{bmatrix}$$

1.13.5 Distances in all Coordinate Systems

Consider two points A and B with the position vectors as,

$\overline{A} = x_1 \overline{a}_x + y_1 \overline{a}_y + z_1 \overline{a}_z$ and $\overline{B} = x_2 \overline{a}_x + y_2 \overline{a}_y + z_2 \overline{a}_z$

then the distance d between the two points in all the three coordinate systems are given by,

$$d = \sqrt{(x_2 - x_1)^2 + (y_2 - y_1)^2 + (z_2 - z_1)^2} \quad \text{... Cartesian}$$

$$d = \sqrt{r_2^2 + r_1^2 - 2\, r_1\, r_2 \cos(\phi_2 - \phi_1) + (z_2 - z_1)^2} \quad \text{... Cylindrical}$$

$$d = \sqrt{r_2^2 + r_1^2 - 2\, r_1\, r_2 \cos\theta_2 \cos\theta_1 - 2\, r_1\, r_2 \sin\theta_2 \sin\theta_1 \cos(\phi_2 - \phi_1)} \quad \text{... Spherical}$$

These results may be used directly in electromagnetics wherever required.

Ex. 1.15 *Obtain the spherical coordinates of 10 $\overline{a}_x$ at the point $P(x = -3, y = 2, z = 4)$.*

Sol. : Given vector is in cartesian system say $\overline{F} = 10\overline{a}_x$.

Then $F_r = \overline{F} \cdot \overline{a}_r = 10\overline{a}_x \cdot \overline{a}_r$

$= 10 \sin\theta \cos\phi$ ... Refer Table 1.3

At point P, $x = -3$, $y = 2$, $z = 4$

Using the relationship between **cartesian and spherical,**

$x = r \sin\theta \cos\phi \quad y = r \sin\theta \sin\phi \quad z = r \cos\theta$

$$\therefore \qquad \phi = \tan^{-1}\frac{y}{x} = \tan^{-1}\frac{2}{-3} = -33.69°$$

But **x is negative** and **y is positive** hence ϕ must be between +90° and +180°. So add 180° to the ϕ to get correct ϕ.

$$\therefore \qquad \phi = -33.69° + 180° = +146.31°$$

$$\therefore \qquad \cos\phi = -0.832 \text{ and } \sin\phi = 0.5547$$

And
$$\theta = \cos^{-1}\frac{z}{r} = \cos^{-1}\frac{z}{\sqrt{x^2+y^2+z^2}}$$

$$= \cos^{-1}\frac{4}{\sqrt{(-3)^2+(2)^2+(4)^2}} = 42.0311°$$

$$\therefore \qquad \cos\theta = 0.7428 \text{ and } \sin\theta = 0.6695$$

$$\therefore \qquad F_r = 10 \times 0.6695 \times (-0.832) = -5.5702$$

$$F_\theta = \bar{F} \cdot \bar{a}_\theta = 10\bar{a}_x \cdot \bar{a}_\theta = 10\cos\theta\cos\phi$$

$$= 10 \times 0.7428 \times (-0.832) = -6.18$$

$$F_\phi = \bar{F} \cdot \bar{a}_\phi = 10\bar{a}_x \cdot \bar{a}_\phi = 10(-\sin\phi)$$

$$= 10 \times (-0.5547) = -5.547$$

$$\therefore \qquad \bar{F} = -5.5702\,\bar{a}_r - 6.18\,\bar{a}_\theta - 5.547\,\bar{a}_\phi \text{ in spherical system.}$$

Ex. 1.15 *Express* $\bar{B} = r^2\,\bar{a}_r + \sin\theta\,\bar{a}_\phi$ *in the cartesian coordinates. Hence obtain* $\bar{B}$ *at* $P(1,2,3)$.

Sol. : Given $\bar{B}$ is in **spherical system** as there is $\sin\theta$ in it and its cartesian coordinates are to be obtained, Referring Table 1.3,

$$\therefore \qquad B_x = \bar{B} \cdot \bar{a}_x = r^2\,\bar{a}_r \cdot \bar{a}_x + \sin\theta\,\bar{a}_\phi \cdot \bar{a}_x$$

$$= r^2 \sin\theta\cos\phi + \sin\theta(-\sin\phi) \qquad \text{... (a)}$$

Then
$$B_y = \bar{B} \cdot \bar{a}_y = r^2\,\bar{a}_r \cdot \bar{a}_y + \sin\theta\,\bar{a}_\phi \cdot \bar{a}_y$$

$$= r^2 \sin\theta\sin\phi + \sin\theta\cos\phi \qquad \text{... (b)}$$

And
$$B_z = \bar{B} \cdot \bar{a}_z = r^2\,\bar{a}_r \cdot \bar{a}_z + \sin\theta\,\bar{a}_\phi \cdot \bar{a}_z$$

$$= r^2\cos\theta + \sin\theta(0) = r^2\cos\theta \qquad \text{... (c)}$$

Now it is known that,

$$r = \sqrt{x^2 + y^2 + z^2}\ , \quad \phi = \tan^{-1}\frac{y}{x} \quad \text{and} \quad \theta = \cos^{-1}\frac{z}{r}$$

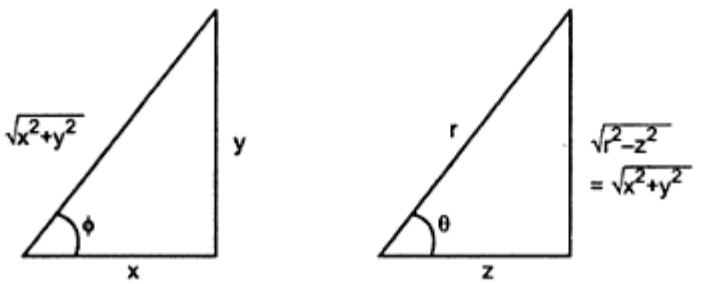

Fig. 1.43

From Fig. 1.43,

$$\sin\phi = \frac{y}{\sqrt{x^2+y^2}}, \cos\phi = \frac{x}{\sqrt{x^2+y^2}}$$

$$\sin\theta = \frac{\sqrt{x^2+y^2}}{r} \quad \text{and} \quad \cos\theta = \frac{z}{r}$$

Using in (a), (b) and (c) we get,

$$B_x = r^2\frac{\sqrt{x^2+y^2}}{r}\frac{x}{\sqrt{x^2+y^2}} + \frac{\sqrt{x^2+y^2}}{r}\left(-\frac{y}{\sqrt{x^2+y^2}}\right)$$

$$= (r\,x) - \frac{y}{r} = \sqrt{x^2+y^2+z^2}\,(x) - \frac{y}{\sqrt{x^2+y^2+z^2}}$$

$$B_y = r^2\frac{\sqrt{x^2+y^2}}{r}\frac{y}{\sqrt{x^2+y^2}} + \frac{\sqrt{x^2+y^2}}{r}\frac{x}{\sqrt{x^2+y^2}}$$

$$= (r\,y) + \frac{x}{r} = \sqrt{x^2+y^2+z^2}\,(y) + \frac{x}{\sqrt{x^2+y^2+z^2}}$$

$$B_z = r^2 \times \frac{z}{r} = (r\,z) = \sqrt{x^2+y^2+z^2}\,(z)$$

$$\therefore \quad \overline{B} = B_x\,\overline{a}_x + B_y\,\overline{a}_y + B_z\,\overline{a}_z$$

Thus $\overline{B}$ at P (1, 2, 3) is, $\overline{B} = 3.207\ \overline{a}_x + 7.7504\ \overline{a}_y + 11.2248\ \overline{a}_z$

Examples with Solutions

Ex. 1.17 *Given $\overline{A} = 5\overline{a}_x$ and $\overline{B} = 4\,\overline{a}_x + B_y\,\overline{a}_y$ then find B_y such that angle between $\overline{A}$ and $\overline{B}$ is 45°. If $\overline{B}$ also has a term $B_z\,\overline{a}_z$, what relationship must exist between B_y and B_z ?* **[M.U. May-99]**

Sol. : $\overline{A} = 5\,\overline{a}_x$ and $\overline{B} = 4\,\overline{a}_x + B_y\,\overline{a}_y$, $\theta_{AB} = 45°$

Now $$\overline{A} \cdot \overline{B} = A_x B_x + A_y B_y + A_z B_z$$

$$= (5 \times 4) + (0) + (0) = 20$$

But $$\overline{A} \cdot \overline{B} = |\overline{A}|\,|\overline{B}| \cos\theta_{AB}$$

$$\therefore \quad 20 = \sqrt{(5)^2} \times \sqrt{(4)^2 + (B_y)^2} \times \cos 45°$$

$$\therefore \quad \sqrt{16 + B_y^2} = 5.6568$$

$$\therefore \quad B_y^2 = 16$$

$$\therefore \quad B_y = \pm 4$$

Now $$\overline{B} = 4\,\overline{a}_x + B_y\,\overline{a}_y + B_z\,\overline{a}_z$$

Still $$\overline{A} \cdot \overline{B} = 20$$

$$\therefore \quad 20 = \sqrt{(5)^2} \times \sqrt{(4)^2 + (B_y)^2 + (B_z)^2} \times \cos 45°$$

$$\therefore \quad \sqrt{16 + B_y^2 + B_z^2} = 5.6568$$

$$\therefore \quad B_y^2 + B_z^2 = 16$$

This is the required relation between B_y and B_z.

Ex. 1.18 *Find the unit vector directed towards the point (x_1, y_1, z_1) from an arbitrary point in the plane $y = -5$.* **[M.U. May-2000]**

Sol. : The plane y = – 5 is parallel to xz plane as shown in the Fig. 1.44.

The coordinates of point P are (x, – 5, z) as y = – 5 is constant. While Q is arbitrary point having coordinates (x_1, y_1, z_1). To find unit vector along the direction PQ.

$$\therefore \quad \overline{a}_{PQ} = \frac{\overline{PQ}}{|\overline{PQ}|}$$

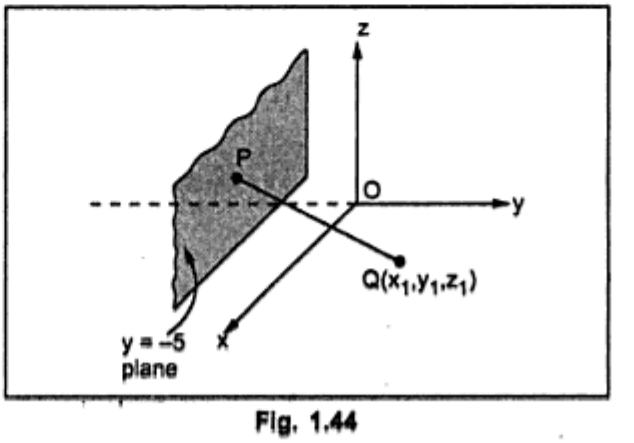

Fig. 1.44

where $\overline{PQ} = \overline{Q} - \overline{P}$

$$\overline{PQ} = (x_1 - x)\bar{a}_x + (y_1 - (-5))\bar{a}_y + (z_1 - z)\bar{a}_z$$

$$\therefore \quad |\overline{PQ}| = \sqrt{(x_1 - x)^2 + (y_1 + 5)^2 + (z_1 - z)^2}$$

$$\therefore \quad \bar{a}_{PQ} = \frac{(x_1 - x)\bar{a}_x + (y_1 + 5)\bar{a}_y + (z_1 - z)\bar{a}_z}{\sqrt{(x_1 - x)^2 + (y_1 + 5)^2 + (z_1 - z)^2}}$$

Ex. 1.19 *Use the cylindrical coordinate system to find the area of the curved surface of a right circular cylinder where r = 20 m, h = 5m and* $30° \le \phi \le 120°$.

[M.U. May-2000]

Sol. : The cylinder is shown in the Fig. 1.45.

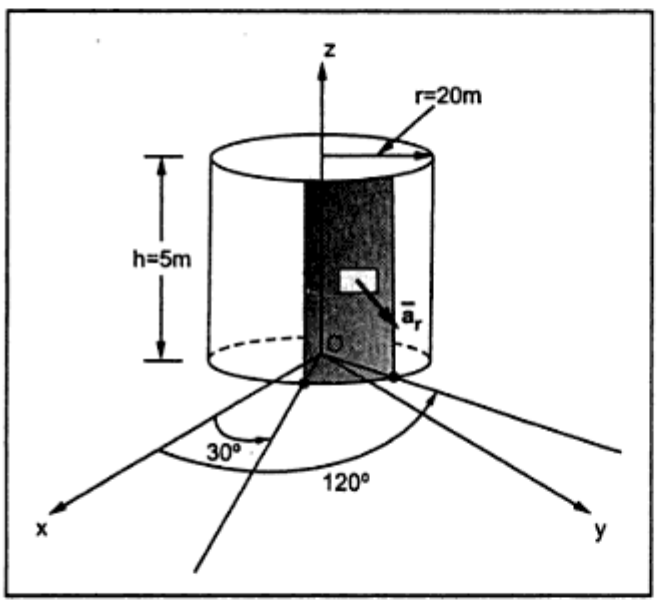

Fig. 1.45

It can be seen that the radius $r = 20\,m$ is constant. The curved surface area is normal to the unit vector radially coming outward which is $\bar{a}_r$. The differential surface area normal to $\bar{a}_r$ is $r\,d\phi\,dz$.

The ϕ varies from 30° to 120° while z varies from 0 to 5 m.

$$S = \int_0^h \int_{\phi_1}^{\phi_2} r\,d\phi\,dz$$

Note : ϕ must be used in radians while calculating area.

$$\therefore \quad \phi_1 = 30° = \frac{\pi}{6} \text{ rad} \quad \text{and} \quad \phi_2 = 120° = \frac{2\pi}{3} \text{ rad}$$

$$\therefore \quad S = \int_0^5 \int_{\pi/6}^{2\pi/3} 20\,d\phi\,dz = 20\,[\phi]_{\pi/6}^{2\pi/3}\,[z]_0^5$$

$$= 20\left[\frac{2\pi}{3} - \frac{\pi}{6}\right][5 - 0] = 20 \times \frac{3\pi}{6} \times 5$$

$$= 50\,\pi\,m^2 = 157.0796\,m^2$$

Ex. 1.20 *Use spherical coordinates to write the differential surface areas dS_1 and dS_2 as shown and integrate to obtain the surfaces areas A and B as shown in the Fig. 1.46.*

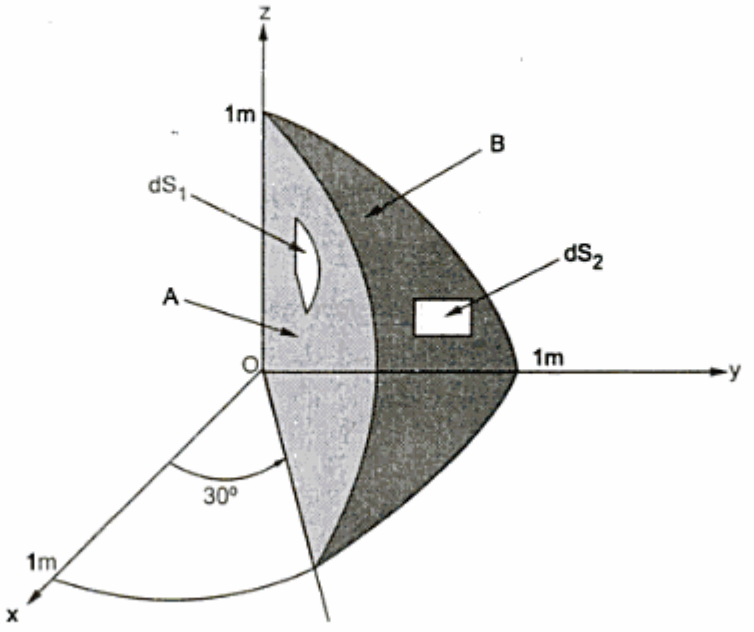

Fig. 1.46

Sol. : Consider differential surface area dS_1. The unit vector perpendicular to it is in the direction of increasing ϕ i.e. $\bar{a}_\phi$. Hence $d\bar{S}_1$ is $d\bar{S}_\phi$.

$$\therefore \quad d\bar{S}_1 = r\,dr\,d\theta\;\bar{a}_\phi$$

$$\therefore \quad A = \iint r\,dr\,d\theta$$

Now r is changing from 0 to 1 while θ is changing from 0 to 90°. (Note that θ is measured from z axis.).

$$\therefore \quad A = \int_0^{90°}\int_0^1 r\,dr\,d\theta = \left[\frac{r^2}{2}\right]_0^1 [\theta]_0^{90°}$$

But **for areas angles must be taken in radians.**

$$\therefore \quad A = \frac{1}{2}\times[90°] = \frac{1}{2}\times\frac{\pi}{2} = \frac{\pi}{4}\ m^2$$

The differential surface area dS_2 is on the curved surface of sphere, the direction normal to it is from origin radially going outward i.e. $\bar{a}_r$.

$$\therefore \quad d\,\bar{S}_2 = r^2 \sin\theta\, d\theta\, d\phi\, \bar{a}_r$$

Now r is constant as 1m. The θ varies from 0 to 90° i.e.

0 to π/2 rad while ϕ is varying from 30° to 90° i.e. π/6 rad to π/2 rad.

$$\therefore \qquad B = \int_{\pi/6}^{\pi/2}\int_{0}^{\pi/2} (1)^2 \sin\theta \, d\theta \, d\phi = \int_{\pi/6}^{\pi/2} [-\cos\theta]_0^{\pi/2} \, d\phi$$

$$= [0-(-1)]\,[\phi]_{\pi/6}^{\pi/2} = \frac{\pi}{2} - \frac{\pi}{6} = \frac{\pi}{3} \text{ m}^2$$

Ex. 1.21 *Given points $P(r=5, \phi=60°, z=2)$ and $Q(r=2, \phi=110°, z=-1)$ in cylindrical coordinate system. Find*
i) Unit vector in cartesian coordinates at P directed towards Q
ii) Unit vector in cylindrical coordinates at P directed towards Q.

Sol. : Let us obtain the cartesian coordinates of P and Q.

It is known that x = r cos ϕ, y = r sin ϕ and z = z

∴ P (2.5, 4.33, 2) and Q (– 0.684, 1.8793, – 1)

i) The unit vector from P to Q is,

$$\bar{a}_{PQ} = \frac{\overline{PQ}}{|\overline{PQ}|} = \frac{\overline{Q}-\overline{P}}{|\overline{PQ}|} \quad \text{where } \overline{P} \text{ and } \overline{Q} \text{ are position vectors}$$

$$= \frac{(-0.684-2.5)\bar{a}_x + (1.8793-4.33)\bar{a}_y + (-1-2)\bar{a}_z}{|\overline{PQ}|}$$

$$= \frac{-3.184\,\bar{a}_x - 2.4507\,\bar{a}_y - 3\bar{a}_z}{\sqrt{(-3.184)^2 + (-2.4507)^2 + (-3)^2}}$$

$$\therefore \qquad \bar{a}_{PQ} = -0.6349\,\bar{a}_x - 0.4887\,\bar{a}_y - 0.5983\,\bar{a}_z$$

ii) The vector $\overline{PQ} = -3.184\,\bar{a}_x - 2.4507\,\bar{a}_y - 3\bar{a}_z$ ... as obtained earlier.

Let us transform this into cylindrical coordinates.

$$(PQ)_r = \overline{PQ} \cdot \bar{a}_r = -3.184\,\bar{a}_x \cdot \bar{a}_r - 2.4507\,\bar{a}_y \cdot \bar{a}_r - 3\bar{a}_z \cdot \bar{a}_r$$

$$= -3.184 \cos\phi - 2.4507\,(-\sin\phi) + 0 \qquad \text{... Refer Table 1.2}$$

At point P, $\phi = 60°$

$$\therefore \qquad (PQ)_r = -3.184 \times 0.5 - 2.4507(-0.866) = 0.5303$$

$$(PQ)_\phi = \overline{PQ} \cdot \bar{a}_\phi = -3.184\,\bar{a}_x \cdot \bar{a}_\phi - 2.4507\,\bar{a}_y \cdot \bar{a}_\phi - 3\bar{a}_z \cdot \bar{a}_\phi$$

$$= -3.184\,(-\sin\phi) - 2.4507 \cos\phi$$

$\therefore \quad (PQ)_\phi = -3.184\,(-0.866) - 2.4507 \times 0.5 = 1.5319$

and $\quad (PQ)_z = \overline{PQ} \cdot \bar{a}_z = -3 \qquad \ldots\ \bar{a}_x \cdot \bar{a}_z = \bar{a}_y \cdot \bar{a}_z = 0$

$\therefore \quad \overline{PQ} = 0.5303\,\bar{a}_r + 1.5319\,\bar{a}_\phi - 3\bar{a}_z$

$$\therefore \quad \bar{a}_{PQ} = \frac{\overline{PQ}}{|\overline{PQ}|} = \frac{0.5303\bar{a}_r + 1.5319\bar{a}_\phi - 3\bar{a}_z}{\sqrt{(0.5303)^2 + (1.5319)^2 + (-3)^2}}$$

$$= 0.155\,\bar{a}_r + 0.449\,\bar{a}_\phi - 0.88\,\bar{a}_z$$

Important Results

☞	**Cartesian coordinate system**
	Point P (x, y, z) Unit vectors $\bar{a}_x, \bar{a}_y$ and $\bar{a}_z$
	Position vector of point, $\bar{P} = x\bar{a}_x + y\bar{a}_y + z\,\bar{a}_z$
	Magnitude of $\bar{P} = \sqrt{x^2 + y^2 + z^2}$
	Unit vector in the direction of $\bar{P} = \dfrac{\bar{P}}{|\bar{P}|} = \bar{a}_P$
	Distance between the two points $= \sqrt{(x_2 - x_1)^2 + (y_2 - y_1)^2 + (z_2 - z_1)^2}$
	Differential lengths are dx, dy, dz
	Differential vector length $\overline{dl} = dx\,\bar{a}_x + dy\,\bar{a}_y + dz\,\bar{a}_z$
	Differential surface area $d\bar{S}_x = dy\,dz\,\bar{a}_x$ $d\bar{S}_y = dx\,dz\,\bar{a}_y$ $d\bar{S}_z = dx\,dy\,\bar{a}_z$
	Differential volume $dv = dx\,dy\,dz$

☞	**Cylindrical coordinate system**
	Point P (r, ϕ, z) Unit vectors $\bar{a}_r, \bar{a}_\phi, \bar{a}_z$
	The limits of variables $0 \le r < \infty$ $0 \le \phi < 2\pi$ $-\infty < z < \infty$
	Vector of a point, $\bar{P} = P_r\bar{a}_r + P_\phi\bar{a}_\phi + P_z\bar{a}_z$
	Differential lengths are $dr, rd\phi, dz$
	Differential vector length $\overline{dl} = dr\,\bar{a}_r + rd\phi\,\bar{a}_\phi + dz\,\bar{a}_z$

Differential surface areas	$d\bar{S}_r = r\,d\phi\,dz\,\bar{a}_r$ $d\bar{S}_\phi = dr\,dz\,\bar{a}_\phi$ $d\bar{S}_z = r\,dr\,d\phi\,\bar{a}_z$
Differential volume $dv = rd\,rd\,\phi\,dz$	

☞	**Spherical coordinate system**
Point P (r, θ, ϕ) Unit vectors $\bar{a}_r, \bar{a}_\theta, \bar{a}_\phi$	
The limits of variables	$0 \le r < \infty$ $0 \le \theta < \pi$ $0 \le \phi < 2\pi$
Vectors of a point, $\bar{P} = P_r\,\bar{a}_r + P_\theta\,\bar{a}_\theta + P_\phi\,\bar{a}_\phi$	
Differential lengths are $dr,\ r\,d\theta,\ r\sin\theta\,d\phi$	
Differential vector length $\overline{dl} = dr\,\bar{a}_r + r\,d\theta\,\bar{a}_\theta + r\sin\theta\,d\phi\,\bar{a}_\phi$	
Differential surface areas	$d\bar{S}_r = r^2\sin\theta\,d\theta\,d\phi\ \bar{a}_r$ $d\bar{S}_\theta = r\sin\theta\,dr\,d\phi\,\bar{a}_\theta$ $d\bar{S}_\phi = r\,dr\,d\theta\,\bar{a}_\phi$
Differential volume $dv = r^2\sin\theta\,dr\,d\theta\,d\phi$	

☞	**Cartesian ↔ Cylindrical**
Cartesian → Cylindrical	Cylindrical → Cartesian
$r = \sqrt{x^2 + y^2}$ $\phi = \tan^{-1}\frac{y}{x}$ $z = z$	$x = r\cos\phi$ $y = r\sin\phi$ $z = z$
Note : The value of ϕ must be obtained by verifying the signs of x and y. If x negative and y positive add 180° and if x negative and y negative subtract 180°.	

☞	**Cartesian ↔ Spherical**
Cartesian → Spherical	Spherical → Cartesian
$r = \sqrt{x^2 + y^2 + z^2}$ $\phi = \tan^{-1}\frac{y}{x}$ $\theta = \cos^{-1}\frac{z}{r}$	$x = r\sin\theta\cos\phi$ $y = r\sin\theta\sin\phi$ $z = r\cos\theta$
Note : The value of ϕ must be obtained by verifying the signs of x and y.	

☞	**Scalar or Dot product**
$\bar{A} \cdot \bar{B} = \lvert \bar{A} \rvert \lvert \bar{B} \rvert \cos \theta_{AB}$ where θ_{AB} = smaller angle between $\bar{A}$ and $\bar{B}$	
$\bar{A} \cdot \bar{B} = 0$ then $\bar{A}$ is perpendicular to $\bar{B}$	
$\bar{A} \cdot \bar{B} = \bar{B} \cdot \bar{A}$ ... Commutative	
$\bar{A} \cdot (\bar{B} + \bar{C}) = \bar{A} \cdot \bar{B} + \bar{A} \cdot \bar{C}$ ... Distributive	
The **dot product** of **perpendicular** unit vectors **is zero.** $\bar{a}_x \cdot \bar{a}_y = \bar{a}_y \cdot \bar{a}_z = \bar{a}_z \cdot \bar{a}_x = 0$	
$\bar{A} \cdot \bar{A} = \lvert \bar{A} \rvert^2$	
$\bar{a}_x \cdot \bar{a}_x = \bar{a}_y \cdot \bar{a}_y = \bar{a}_z \cdot \bar{a}_z = 1$	
$\bar{A} \cdot \bar{B} = A_x B_x + A_y B_y + A_z B_z$ ... In cartesian	
The component of $\bar{P}$ in the direction of unit vector $\bar{a}$ is $\bar{P} \cdot \bar{a}$.	
The component of $\bar{P}$ in the direction of $\bar{Q}$ is $\bar{P} \cdot \bar{a}_Q = \bar{P} \cdot \dfrac{\bar{Q}}{\lvert \bar{Q} \rvert}$	

☞	**Vector or Cross product**
$\bar{A} \times \bar{B} = \lvert \bar{A} \rvert \lvert \bar{B} \rvert \sin \theta_{AB}\, \bar{a}_N$ where $\bar{a}_N$ = Unit vector perpendicular to the plane of $\bar{A}$ and $\bar{B}$ in the direction decided by **right hand screw rule** θ_{AB} = Smaller angle between $\bar{A}$ and $\bar{B}$	
$\bar{A} \times \bar{B} \neq \bar{B} \times \bar{A}$ but $\bar{A} \times \bar{B} = -[\bar{B} \times \bar{A}]$	
$\bar{A} \times (\bar{B} + \bar{C}) = \bar{A} \times \bar{B} + \bar{A} \times \bar{C}$	
For **parallel** vectors, **cross product is zero.** $\bar{A} \times \bar{A} = 0$ $\bar{a}_x \times \bar{a}_x = \bar{a}_y \times \bar{a}_y = \bar{a}_z \times \bar{a}_z = 0$	

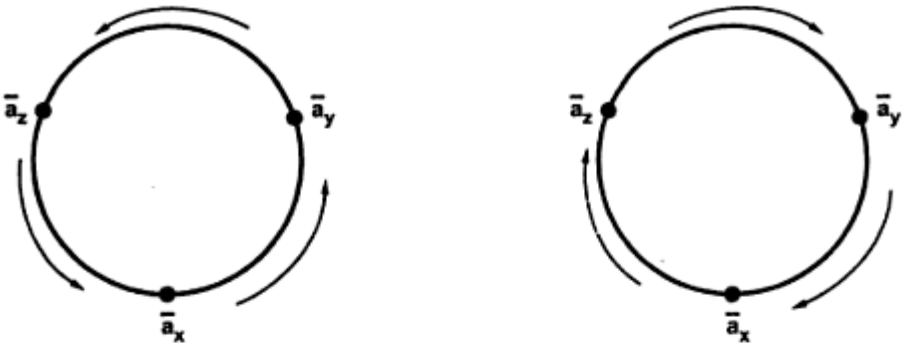

Anticlockwise positive result
$\bar{a}_x \times \bar{a}_y = \bar{a}_z$

Clockwise negative result
$\bar{a}_x \times \bar{a}_z = -\bar{a}_y$

Applicable in all the three coordinate systems

Fig. 1.48

$$\bar{A} \times \bar{B} = \begin{vmatrix} \bar{a}_x & \bar{a}_y & \bar{a}_z \\ A_x & A_y & A_z \\ B_x & B_y & B_z \end{vmatrix} \quad \text{... In cartesian}$$

Note : The result can be used in all coordinate systems by proper replacement of unit vectors and components.

Product of three vectors

Scalar triple product is,

$$\bar{A} \cdot (\bar{B} \times \bar{C}) = \begin{vmatrix} A_x & A_y & A_z \\ B_x & B_y & B_z \\ C_x & C_y & C_z \end{vmatrix} \quad \text{.... 'abc' rule}$$

Vector triple product is,

$$\bar{A} \times (\bar{B} \times \bar{C}) = \bar{B}(\bar{A} \cdot \bar{C}) - \bar{C}(\bar{A} \cdot \bar{B}) \quad \text{... 'bac-cab' rule}$$

Transformation of vectors

1. **Cartesian to cylindrical,** $\bar{A} = A_x\,\bar{a}_x + A_y\bar{a}_y + A_z\,\bar{a}_z$

$A_r = \bar{A} \cdot \bar{a}_r$, $A_\phi = \bar{A} \cdot \bar{a}_\phi$, $A_z = \bar{A} \cdot \bar{a}_z$

Dot operator •	$\bar{a}_r$	$\bar{a}_\phi$	$\bar{a}_z$
$\bar{a}_x$	$\cos\phi$	$-\sin\phi$	0
$\bar{a}_y$	$\sin\phi$	$\cos\phi$	0
$\bar{a}_z$	0	0	1

$$\begin{bmatrix} A_r \\ A_\phi \\ A_z \end{bmatrix} = \begin{bmatrix} \cos\phi & \sin\phi & 0 \\ -\sin\phi & \cos\phi & 0 \\ 0 & 0 & 1 \end{bmatrix} \begin{bmatrix} A_x \\ A_y \\ A_z \end{bmatrix}$$

2. **Cylindrical to cartesian,** $\bar{A} = A_r\,\bar{a}_r + A_\phi\,\bar{a}_\phi + A_z\,\bar{a}_z$

$A_x = \bar{A} \cdot \bar{a}_x$, $A_y = \bar{A} \cdot \bar{a}_y$, $A_z = \bar{A} \cdot \bar{a}_z$

$$\begin{bmatrix} A_x \\ A_y \\ A_z \end{bmatrix} = \begin{bmatrix} \cos\phi & -\sin\phi & 0 \\ \sin\phi & \cos\phi & 0 \\ 0 & 0 & 1 \end{bmatrix} \begin{bmatrix} A_r \\ A_\phi \\ A_z \end{bmatrix}$$

3. **Cartesian to spherical,** $\bar{A} = A_x\,\bar{a}_x + A_y\,\bar{a}_y + A_z\,\bar{a}_y$

$A_r = \bar{A} \cdot \bar{a}_r$, $A_\theta = \bar{A} \cdot \bar{a}_\theta$, $A_\phi = \bar{A} \cdot \bar{a}_\phi$

Dot operator •	$\bar{a}_r$	$\bar{a}_\theta$	$\bar{a}_\phi$
$\bar{a}_x$	$\sin\theta\cos\phi$	$\cos\theta\cos\phi$	$-\sin\phi$
$\bar{a}_y$	$\sin\theta\sin\phi$	$\cos\theta\sin\phi$	$\cos\phi$
$\bar{a}_z$	$\cos\theta$	$-\sin\theta$	0

$$\begin{bmatrix} A_r \\ A_\theta \\ A_\phi \end{bmatrix} = \begin{bmatrix} \sin\theta\cos\phi & \sin\theta\sin\phi & \cos\theta \\ \cos\theta\cos\phi & \cos\theta\sin\phi & -\sin\theta \\ -\sin\phi & \cos\phi & 0 \end{bmatrix} \begin{bmatrix} A_x \\ A_y \\ A_z \end{bmatrix}$$

4. **Spherical to cartesian,** $\bar{A} = a_r\,\bar{a}_r + A_\theta\,\bar{a}_\theta + A_\phi\,\bar{a}_\phi$

$A_x = \bar{A} \cdot \bar{a}_x$, $A_y = \bar{A} \cdot \bar{a}_\theta$, $A_z = \bar{A} \cdot \bar{a}_z$

$$\begin{bmatrix} A_x \\ A_y \\ A_z \end{bmatrix} = \begin{bmatrix} \sin\theta\cos\phi & \cos\theta\cos\phi & -\sin\phi \\ \sin\theta\sin\phi & \cos\theta\sin\phi & \cos\phi \\ \cos\theta & -\sin\theta & 0 \end{bmatrix} \begin{bmatrix} A_r \\ A_\theta \\ A_\phi \end{bmatrix}$$

Note : If vector P is transformed from one coordinate system to other and

$P(x, y, z) = P(r, \phi, z) = P(r, \theta, \phi)$ then

$|P(x, y, z)| = |P(r, \phi, z)| = |P(r, \theta, \phi)|$

This can be used to check the correctness of transformation.

Review Questions

1. *What is a scalar and scalar field ? Give two examples.*
2. *What is a vector and vector field ? Give two examples.*
3. *What is a unit vector ? What is its significance in the vector representation ? How to find unit vector along a particular vector ?*
4. *Explain cartesian coordinate system and differential elements in cartesian coordinate system.*
5. *Explain cylindrical coordinate system and differential elements in cylindrical coordinate system.*
6. *Explain spherical coordinate system and differential elements in spherical coordinate system.*

7. *What ia a dot product ? Explain its significance and applications.*
8. *What is a cross product ? Explain its properties and applications.*
9. *Explain the relationship between cartesian and cylindrical as well as cartesian and spherical systems.*
10. *How to transform the vectors from one coordinate system to other ?*
11. *Given two points A (5, 4, 3) and B (2, 3, 4).*
    Find : i) $\overline{A}+\overline{B}$ *ii)* $\overline{A}\bullet\overline{B}$ *iii)* θ_{AB} *iv)* $\overline{A}\times\overline{B}$
    v) Unit vector normal to the plane containing $\overline{A}$ *and* $\overline{B}$.
    vi) Area of parallelogram of which $\overline{A}$ *and* $\overline{B}$ *are adjacent sides.*

    [Ans. : $7\overline{a}_x+7\overline{a}_y+7\overline{a}_z$, **34, 26.762°,** $0.41\overline{a}_x-0.82\overline{a}_y+0.41\overline{a}_z$, **17.1464]**

    [Hint. : For area $|\overline{A}||\overline{B}|\sin\theta_{AB}=|\overline{A}\times\overline{B}|$**]**
12. *If two positions vectors given are,* $\overline{A}=-2\overline{a}_x-5\overline{a}_y-4\overline{a}_z$ *and* $\overline{B}=2\overline{a}_x+3\overline{a}_y+5\overline{a}_z$ *then find,*
    i) $\overline{AB}$ *ii)* $\overline{a}_A$ *iii)* $\overline{a}_B$ *iv)* $\overline{a}_{AB}$ *v) Unit vector in the direction from C to A where C is (3,5,8).*

    [Ans. : $4\overline{a}_x+8\overline{a}_y+9\overline{a}_z$, $-0.298\overline{a}_x-0.745\overline{a}_y-0.596\overline{a}_z$, $-0.324\overline{a}_x+0.486\overline{a}_y-0.811\overline{a}_z$, $0.315\overline{a}_x+0.63\overline{a}_y+0.71\overline{a}_z$, $-0.304\overline{a}_x-0.61\overline{a}_y-0.732\overline{a}_z$**]**
13. *Find the value of* B_z *such that the angle between the vectors* $\overline{A}=2\overline{a}_x+\overline{a}_y+4\overline{a}_z$ *and* $\overline{B}=-2\overline{a}_x-\overline{a}_y+B_z\overline{a}_z$ *is 45°.* **[Ans. : 7.9]**
14. *For the vectors,* $\overline{A}=2\overline{a}_x-2\overline{a}_y+\overline{a}_z$ *and* $\overline{B}=3\overline{a}_x+5\overline{a}_y-2\overline{a}_z$ *find* $\overline{A}\bullet\overline{B}$, $\overline{A}\times\overline{B}$ *and show that* $\overline{A}\times\overline{B}=-(\overline{B}\times\overline{A})$. **[Ans. :** $-6, -\overline{a}_x+7\overline{a}_y+16\overline{a}_z$**)**
15. *Show that* $\overline{A}=4\overline{a}_x-2\overline{a}_y-\overline{a}_z$ *and* $\overline{B}=\overline{a}_x+4\overline{a}_y-4\overline{a}_z$ *are mutually perpendicular vectors.*

    [Hint. : Show $\overline{A}\bullet\overline{B}=0$**]**
16. *Find the angle between the vectors,* $\overline{A}=2\overline{a}_x+4\overline{a}_y-\overline{a}_z$ *and* $\overline{B}=3\overline{a}_x+6\overline{a}_y-4\overline{a}_z$ *using dot product and cross product.* **[Ans. : 18.21°]**
17. *Consider two vectors* $\overline{P}=4\overline{a}_y+10\overline{a}_z$ *and* $\overline{Q}=2\overline{a}_x+3\overline{a}_y$. *Find the projection of* $\overline{P}$ *and* $\overline{Q}$.

    [Ans. : 3.328]
18. *Given the points A (x = 2, y = 3, z = – 1) and* $B(r=4,\phi=-50°,z=2)$ *, find the distance of A and B from the origin. Also find distance A to B.* **[Ans. : 3.74, 4.47, 6.78]**
19. *Given the two points A (x = 2, y = 3, z = – 1) and* $B(r=4,\theta=25°,\phi=120°)$. *Find the spherical coordinates of A, cartesian coordinates of B and distance AB.*

    [Ans. : A (3.74, 105.5°, 56.31°), B (– 0.845, 1.46, 3.627, 5.64)]
20. *Transform the vector* $5\overline{a}_x$ *at Q (x = 3, y = 4, z = – 2) to the cylindrical coordinates.*

    [Ans. : $3\overline{a}_r-4\overline{a}_\phi$**]**

❑❑❑

2

Coulomb's Law and Electric Field Intensity

2.1 Introduction

Electrostatics is a very important step in the study of engineering electromagnetics. Electrostatics is a science related to the electric charges which are static i.e. are at rest. An electric charge has its effect in a region or a space around it. This region is called an **electric field** of that charge. Such an electric field produced due to stationary electric charge does not vary with time. It is time invariant and called **static electric field**. The study of such time invariant electric fields in a space or vacuum, produced by various types of static charge distributions is called **electrostatics**. A very common example of such a field is a field used in cathode ray tube for focusing and deflecting a beam. Electrostatics plays a very important role in our day to day life. Most of the computer peripheral devices like keyboards, touch pads, liquid crystal displays etc. work on the principle of electrostatics. A variety of machines such as X-ray machine and medical instruments used for electrocardiograms, scanning etc. use the principle of electrostatics. Many industrial processes like spray painting, electrodeposition etc. also use the principle of electrostatics. Electrostatics is also used in the agricultural activities like sorting seeds, spraying to plants etc. Many components such as resistors, capacitors etc. and the devices such as bipolar transistors, field effect transistors function based on electrostatics. Hence this chapter introduces the basic concepts of electrostatics.

2.2 Coulomb's Law

The study of electrostatics starts with the study of the results of the experiements performed by an engineer from the French Army Engineers, **Colonel Charles Coulomb**. The experiments are related to the force exerted between the two point charges, which are placed near each other. The force exerted is due to the electric fields produced by the point charges.

$$\therefore \quad \boxed{F = k\frac{Q_1Q_2}{R^2}} \quad \text{... (2)}$$

where k = Constant of proportionality

2.2.1.1 Constant of Proportionality (k)

The constant of proportionality takes into account the effect of medium, in which charges are located. In the International System of Units (SI), the charges Q_1 and Q_2 are expressed in Coulombs (C), the distance R in metres (m) and the force F in newtons (N). Then to satisfy Coulomb's law, the constant of proportionality is defined as,

$$\boxed{k = \frac{1}{4\pi\varepsilon}} \quad \text{... (3)}$$

where ε = Permittivity of the medium in which charges are located

The units of ε are farads/metre (F/m).

In general ε is expressed as,

$$\varepsilon = \varepsilon_0\varepsilon_r \quad \text{... (4)}$$

where ε_0 = Permittivity of the free space or vacuum

ε_r = Relative permittivity or dielectric constant of the medium with respect to free space

ε = Absolue permittivity

For the **free space** or **vacuum**, the relative permittivity $\varepsilon_r = 1$, hence

$$\varepsilon = \varepsilon_0$$

$$\therefore \quad F = \frac{1}{4\pi\varepsilon_0}\frac{Q_1Q_2}{R^2} \quad \text{... (5)}$$

The value of permittivity of free space ε_0 is,

$$\boxed{\varepsilon_0 = \frac{1}{36\pi}\times 10^{-9} = 8.854\times 10^{-12}\ \text{F/m}} \quad \text{... (6)}$$

$$\therefore \quad k = \frac{1}{4\pi\varepsilon_0} = \frac{1}{4\pi\times 8.854\times 10^{-12}} = 8.98\times 10^9 \approx 9\times 10^9\ \text{m/F} \quad \text{... (7)}$$

Hence the Coulomb's law can be expressed as,

$$F = \frac{Q_1 Q_2}{4\pi\varepsilon_0 R^2} \quad \text{... (8)}$$

This is the force between the two point charges located in **free space** or **vacuum**.

Key Point: *As Q is measured in Coulomb, R in metre and F in newton, the units of* ε_0 *are,*

$$\text{Unit of } \varepsilon_0 = \frac{(C)(C)}{(N)(m^2)} = \frac{C^2}{N-m^2}$$

$$= \frac{C^2}{N\text{-}m} \times \frac{1}{m}$$

But $\frac{C^2}{N\text{-}m}$ = Farad which is practical unit of capacitance

$\therefore$ Unit of ε_0 = F/m

2.2.2 Vector Form of Coulomb's Law

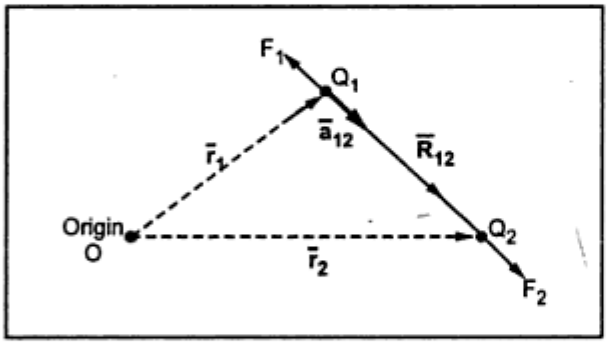

Fig. 2.2 Vector form of Coulomb's law

The force exerted between the two point charges has a fixed direction which is a straight line joining the two charges. Hence the force exerted between the two charges can be expressed in a vector form.

Consider the two point charges Q_1 and Q_2 located at the points having position vectors $\bar{r}_1$ and $\bar{r}_2$ as shown in the Fig. 2.2.

Then the force exerted by Q_1 on Q_2 acts along the direction $\bar{R}_{12}$ where $\bar{a}_{12}$ is unit vector along $\bar{R}_{12}$. Hence the force in the vector form can be expressed as,

$$\boxed{\bar{F}_2 = \frac{Q_1 Q_2}{4\pi\varepsilon_0 R_{12}^2}\bar{a}_{12}} \quad \text{... (9)}$$

where $\bar{a}_{12}$ = Unit vector along $\bar{R}_{12} = \frac{\text{Vector}}{\text{Magnitude of vector}}$

$$\therefore \quad \bar{a}_{12} = \frac{\bar{R}_{12}}{|\bar{R}_{12}|} = \frac{\bar{r}_2 - \bar{r}_1}{|\bar{R}_{12}|} = \frac{\bar{r}_2 - \bar{r}_1}{|\bar{r}_2 - \bar{r}_1|} \quad \text{... (10)}$$

where $|\bar{R}_{12}|$ = R = distance between the two charges

The following **observations** are important :

1. As shown in the Fig. 2.3, the force $\bar{F}_1$ is the force exerted on Q_1 due to Q_2. It can be expressed as,

$$\bar{F}_1 = \frac{Q_1 Q_2}{4\pi\varepsilon_0 R_{21}^2}\bar{a}_{21} = \frac{Q_1 Q_2}{4\pi\varepsilon_0 R_{21}^2} = \frac{\bar{r}_1 - \bar{r}_2}{|\bar{r}_1 - \bar{r}_2|} \quad \text{... (11)}$$

But $\bar{r}_1 - \bar{r}_2 = -[\bar{r}_2 - \bar{r}_1]$

$\therefore$ $\bar{a}_{21} = -\bar{a}_{12}$

Hence substituting in (11),

$$\bar{F}_1 = \frac{Q_1 Q_2}{4\pi\varepsilon_0 R_{21}^2}(-\bar{a}_{21}) = -\bar{F}_2 \quad \text{... (12)}$$

Hence force exerted by the two charges on each other is equal but opposite in direction.

2. The like charges repel each other while the unlike charges attract each other. This is shown in the Fig. 2.3. These are experiement conclusions though not reflected in the mathematical expression.

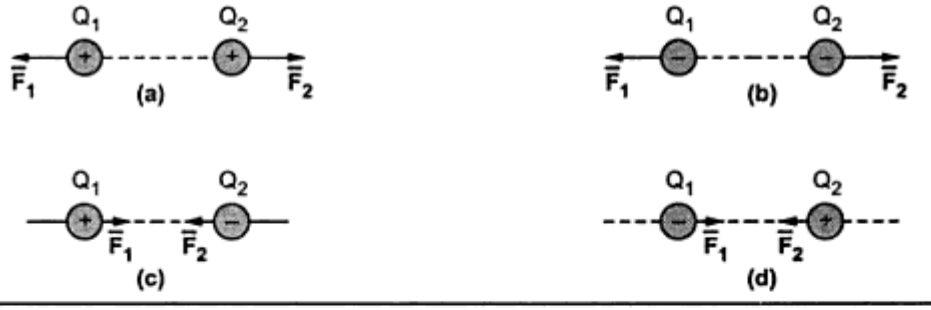

Fig. 2.3

3. It is necessary that the two charges are the point charges and stationary in nature.

4. The two point charges may be positive or negative. Hence their **signs** must be **considered** while using equation (9) to calculate the force exerted.

5. The Coulomb's law is linear which shows that if any one charge is increased 'n' times then the force exerted also increass by n times.

$\therefore$ $\bar{F}_2 = -\bar{F}_1$ then $n\bar{F}_2 = -n\bar{F}_1$

where n = scalar

2.2.3 Force Due to n Number of Charges

If there are mor than two point charges, then each will exert force on the other, then the net force on any charge can be obtained by the **principle** of **superposition**.

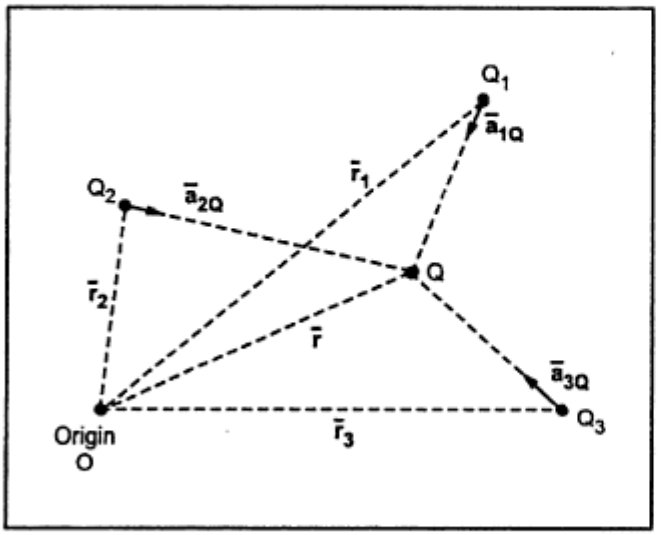

Fig. 2.4

Consider a point charge Q surrounded by three other point charges Q_1, Q_2 and Q_3, as shown in the Fig. 2.4.

The total force on Q in such a case is **vector sum** of all the forces exerted on Q due to each of the other point charges Q_1, Q_2 and Q_3.

Consider force exerted on Q due to Q_1. At this time, according to principle of superposition effects of Q_2 and Q_3 are to be suppressed.

$$\therefore \qquad \bar{F}_{Q_1 Q} = \frac{Q_1 Q}{4\pi\varepsilon_0 R_{1Q}^2}\bar{a}_{1Q} \qquad \text{... (13)}$$

where $$\bar{a}_{1Q} = \frac{\bar{r} - \bar{r}_1}{|\bar{r} - \bar{r}_1|}$$

Similarly force exerted due to Q_2 on Q is,

$$\bar{F}_{Q_2 Q} = \frac{Q_2 Q}{4\pi\varepsilon_0 R_{2Q}^2}\bar{a}_{2Q} \qquad \text{... (14)}$$

where $$\bar{a}_{2Q} = \frac{\bar{r} - \bar{r}_2}{|\bar{r} - \bar{r}_2|}$$

And force exerted due to Q_3 on Q is,

$$\bar{F}_{Q_3 Q} = \frac{Q_3 Q}{4\pi\varepsilon_0 R_{3Q}^2}\bar{a}_{3Q} \qquad \text{... (15)}$$

where $$\bar{a}_{3Q} = \frac{\bar{r} - \bar{r}_3}{|\bar{r} - \bar{r}_3|}$$

Hence the total force on Q is,

$$\bar{F}_Q = \bar{F}_{Q_1 Q} + \bar{F}_{Q_2 Q} + \bar{F}_{Q_3 Q} \quad \text{... (16)}$$

In general if there are n other charges then force exerted on Q due to all other n charges is,

$$\bar{F}_Q = \bar{F}_{Q_1 Q} + \bar{F}_{Q_2 Q} + \ldots\ldots + \bar{F}_{Q_n Q} \quad \text{... (17)}$$

$$\therefore \quad \boxed{\bar{F}_Q = \frac{Q}{4\pi\varepsilon_0} \sum_{i=1}^{n} \frac{Q_i}{R_{iQ}^2} \frac{\bar{r} - \bar{r}_i}{|\bar{r} - \bar{r}_i|}} \quad \text{... (18)}$$

2.2.4 Steps to Solve Problems on Coulomb's Law

Step 1 : Obtain the position vectors of the points where the charges are located.

Step 2 : Obtain the unit vector along the straight line joining the charges. The direction is towards the charge on which the force exerted is to be calculated.

Step 3 : Using Coulomb's law, express the force exerted in the vector form.

Step 4 : If there are more charges, repeat steps 1 to 3 for each charge exerting a force on the charge under consideration.

Step 5 : Using the principle of superposition, the vector sum of all the forces calculated earlier is the resultant force, exerted on the charge under consideration.

Ex. 2.1 *A charge $Q_1 = -20\mu C$ is located at P (– 6, 4, 6) and a charge $Q_2 = 50\mu C$ is located at R (5, 8, – 2) in a free space. Find the force exerted on Q_2 by Q_1 in vector form. The distances given are in metres.*

Sol. : From the co-ordinates of P and R , the respective position vectors are –

$$\bar{P} = -6\bar{a}_x + 4\bar{a}_y + 6\bar{a}_z$$

and

$$\bar{R} = 5\bar{a}_x + 8\bar{a}_y - 2\bar{a}_z$$

The force on Q_2 is given by,

$$\bar{F}_2 = \frac{Q_1 Q_2}{4\pi\varepsilon_0 R_{12}^2} \bar{a}_{12}$$

$$\bar{R}_{12} = \bar{R}_{PR} = \bar{R} - \bar{P} = [5-(-6)]\,\bar{a}_x + (8-4)\,\bar{a}_y + [-2-(6)\bar{a}_z]$$

$$= 11\bar{a}_x + 4\bar{a}_y - 8\bar{a}_z$$

$$\therefore \quad |R_{12}| = \sqrt{(11)^2 + (4)^2 + (-8)^2} = 14.1774$$

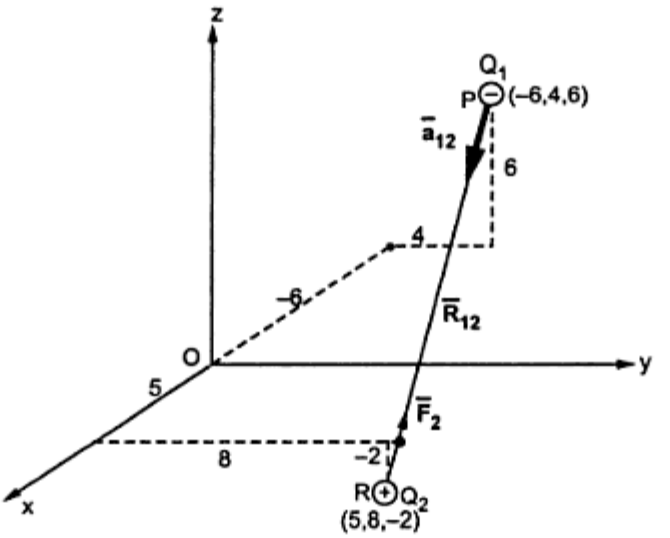

Fig. 2.5

$$\therefore \quad \bar{a}_{12} = \frac{\bar{R}_{12}}{|\bar{R}_{12}|} = \frac{11\bar{a}_x + 4\bar{a}_y - 8\bar{a}_z}{14.1774}$$

$$\therefore \quad \bar{a}_{12} = 0.7758\,\bar{a}_x + 0.2821\,\bar{a}_y - 0.5642\,\bar{a}_z$$

$$\therefore \quad \bar{F}_2 = \frac{-20\times 10^{-6}\times 50\times 10^{-6}}{4\pi\times 8.854\times 10^{-12}\times (14.1774)^2}[\bar{a}_{12}]$$

$$= -0.0447\left[0.7758\,\bar{a}_x + 0.2821\,\bar{a}_y - 0.5642\,\bar{a}_z\right] \quad \text{... (A)}$$

$$= -0.0346\,\bar{a}_x - 0.01261\,\bar{a}_y + 0.02522\,\bar{a}_z \text{ N} \quad \text{... (B)}$$

This is the required force exerted on Q_2 by Q_1.

The magnitude of the force is,

$$|\bar{F}_2| = \sqrt{(0.0346)^2 + (0.01261)^2 + (-0.02522)^2} = 44.634 \text{ mN}$$

Key Point: *Note that as the two charges are of opposite polarity, the force $\bar{F}_2$ is attractive in nature. As shown in the Fig. 2.5, it acts in opposite direction to $\bar{a}_{12}$, as indicated by negative sign in the equation (A).*

Ex. 2.2 *Four point charges each of 10 μC are placed in free space at the points (1, 0, 0), (−1, 0, 0), (0, 1, 0) and (0, − 1, 0) m respectively. Determine the force on a point charge of 30 μC located at a point (0, 0, 1) m.* **(JNTU-June 2002)**

Sol. : Use the principle of superposition as there are four charges exerting a force on the fifth charge. The locations of charges are shown in the Fig. 2.6.

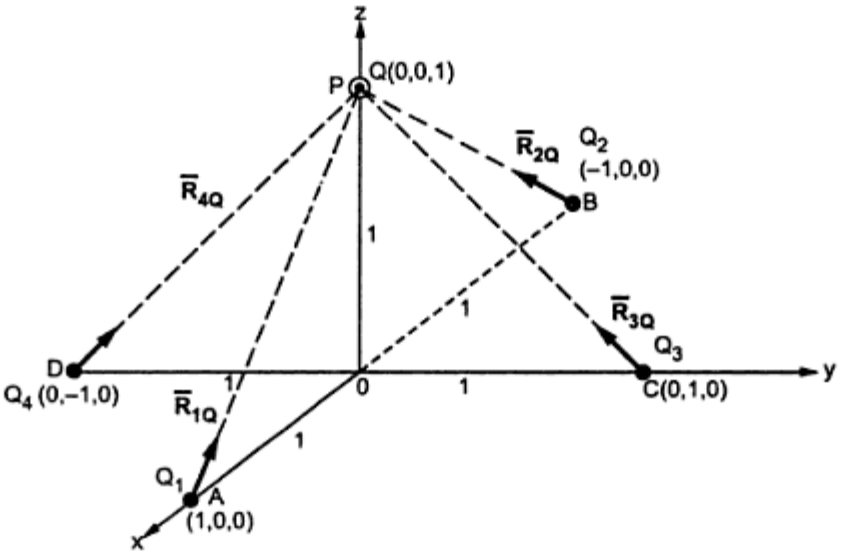

Fig. 2.6

The position vectors of four points at which the charges Q_1 to Q_4 are located can be obtained as,

$$\overline{A} = \overline{a}_x\,,\ \overline{B} = -\overline{a}_x\,,\ \overline{C} = \overline{a}_y \ \text{ and } \ \overline{D} = -\overline{a}_y$$

while position vector of point P where charge of 30 μC is situated is,

$$\overline{P} = \overline{a}_z$$

Consider force on Q due to Q_1 alone,

$$\overline{F}_1 = \frac{QQ_1}{4\pi\varepsilon_0 R_{1Q}^2}\,\overline{a}_{1Q} = \frac{QQ_1}{4\pi\varepsilon_0 R_{1Q}^2}\cdot\frac{\overline{R}_{1Q}}{\left|\overline{R}_{1Q}\right|}$$

where $\overline{R}_{1Q} = \overline{P} - \overline{A} = \overline{a}_z - \overline{a}_x$ and $\left|\overline{R}_{1Q}\right| = \sqrt{1^2 + 1^2} = \sqrt{2}$

$$\therefore \quad \overline{F}_1 = \frac{30\times10^{-6}\times10\times10^{-6}}{4\pi\times8.854\times10^{-12}\times\left(\sqrt{2}\right)^2}\left[\frac{\overline{a}_z - \overline{a}_x}{\sqrt{2}}\right]$$

$$= 0.9533\,[\overline{a}_z - \overline{a}_x] \qquad \text{... (1)}$$

It can be seen from the Fig. 2.6 that due to symmetry,

$$\left|\overline{R}_{1Q}\right| = \left|\overline{R}_{2Q}\right| = \left|\overline{R}_{3Q}\right| = \left|\overline{R}_{4Q}\right| = \sqrt{2}$$

Now

$$\overline{R}_{2Q} = \overline{P} - \overline{B} = \overline{a}_z + \overline{a}_x\,, \qquad \overline{a}_{2Q} = \overline{a}_z + \overline{a}_x/\sqrt{2}$$

$$\overline{R}_{3Q} = \overline{P} - \overline{C} = \overline{a}_z - \overline{a}_y\,, \qquad \overline{a}_{3Q} = \overline{a}_z - \overline{a}_y/\sqrt{2}$$

$$\overline{R}_{4Q} = \overline{P} - \overline{D} = \overline{a}_z + \overline{a}_y\,, \qquad \overline{a}_{4Q} = \overline{a}_z + \overline{a}_y/\sqrt{2}$$

$$\therefore \quad \bar{F}_2 = \text{Force on Q due to } Q_2 = \frac{QQ_2}{4\pi\varepsilon_0 R_{2Q}^2}\bar{a}_{2Q}$$

$$\therefore \quad \bar{F}_3 = \text{Force on Q due to } Q_3 = \frac{QQ_3}{4\pi\varepsilon_0 R_{3Q}^2}\bar{a}_{3Q}$$

$$\therefore \quad \bar{F}_4 = \text{Force on Q due to } Q_4 = \frac{QQ_4}{4\pi\varepsilon_0 R_{4Q}^2}\bar{a}_{4Q}$$

$$\frac{QQ_2}{4\pi\varepsilon_0 R_{2Q}^2} = \frac{QQ_3}{4\pi\varepsilon_0 R_{3Q}^2} = \frac{QQ_4}{4\pi\varepsilon_0 R_{4Q}^2} = \frac{30\times10^{-6}\times10\times10^{-6}}{4\pi\times8.854\times10^{-12}\times\left(\sqrt{2}\right)^2}$$

$$= 1.3481$$

$$\therefore \quad \bar{F}_2 = 1.3481\left[\frac{\bar{a}_z+\bar{a}_x}{\sqrt{2}}\right] = 0.9533\left(\bar{a}_z+\bar{a}_x\right) \quad \text{... (2)}$$

$$\therefore \quad \bar{F}_3 = 1.3481\left[\frac{\bar{a}_z-\bar{a}_y}{\sqrt{2}}\right] = 0.9533\left(\bar{a}_z-\bar{a}_y\right) \quad \text{... (3)}$$

$$\therefore \quad \bar{F}_4 = 1.3481\left[\frac{\bar{a}_z+\bar{a}_y}{\sqrt{2}}\right] = 0.9533\left(\bar{a}_z+\bar{a}_y\right) \quad \text{... (4)}$$

Hence the total force F_t exerted on Q due to all four charges is vector sum of the individual forces exerted on Q, by the charges.

$$\therefore \quad \bar{F}_t = \bar{F}_1+\bar{F}_2+\bar{F}_3+\bar{F}_4$$

$$= 0.9533\left[\bar{a}_z-\bar{a}_x+\bar{a}_z+\bar{a}_x+\bar{a}_z-\bar{a}_y+\bar{a}_z+\bar{a}_y\right]$$

$$= 3.813\,\bar{a}_z \text{ N}$$

2.3 Electric Field Intensity

Consider a point charge Q_1 as shown in Fig. 2.7 (a).

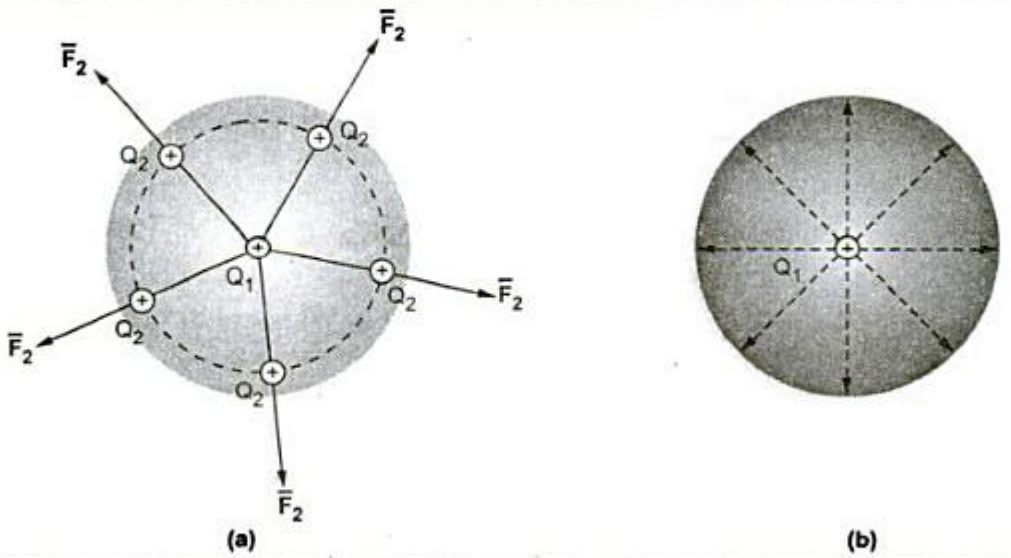

Fig. 2.7 Electric field

If any other similar charge Q_2 is brought near it, Q_2 experiences a force. Infact if Q_2 is moved around Q_1, still Q_2 experiences a force as shown in the Fig. 2.7 (a).

Thus there exists a region around a charge in which it exerts a force on any other charge. This region where a particular charge exerts a force on any other charge located in that region is called **electric field** of that charge. The electric field of Q_1 is shown in the Fig. 2.7 (b).

The force experienced by the charge Q_2 due to Q_1 is given by Coulomb's law as,

$$\bar{F}_2 = \frac{Q_1 Q_2}{4\pi\varepsilon_0 R_{12}^2}\bar{a}_{12}$$

Thus force per unit charge can be written as,

$$\frac{\bar{F}_2}{Q_2} = \frac{Q_1}{4\pi\varepsilon_0 R_{12}^2}\bar{a}_{12} \qquad \text{... (1)}$$

This force exerted per unit charge is called **electric field intensity** or **electric field strength**. It is a **vector quantity** and is directed along a segment from the charge Q_1 to the position of any other charge. It is denoted as $\bar{E}$.

$$\therefore \qquad \boxed{\bar{E} = \frac{Q_1}{4\pi\varepsilon_0 R_{1p}^2}\bar{a}_{1p}} \qquad \text{... (2)}$$

where p = position of any other charge around Q_1

The equation (2) is the electric field intensity due to a single point charge Q_1 in a free space or vacuum.

Another definition of electric field intensity is the force experienced by a unit positive test charge i.e. $Q_2 = 1C$.

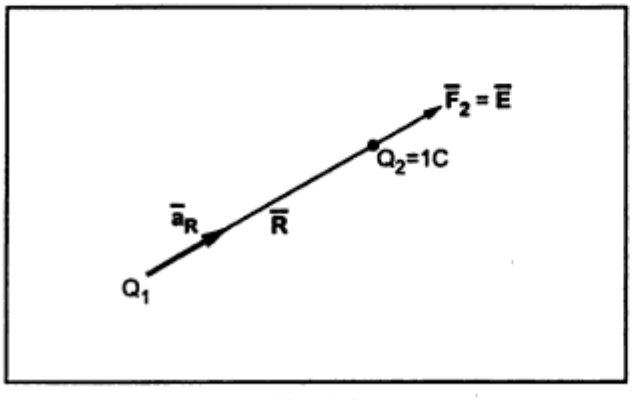

Fig. 2.8

Consider a charge Q_1 as shown in the Fig. 2.8. The unit positive charge Q_2 = 1C is placed at a distance R from Q_1. Then the force acting on Q_2 due to Q_1 is along the unit vector $\bar{a}_R$. As the charge Q_2 is **unit charge**, the force exerted on Q_2 is nothing but electric field intensity $\bar{E}$ of Q_1 at the point where unit charge is placed.

$$\therefore \quad \boxed{\bar{E} = \frac{Q_1}{4\pi\varepsilon_0 R^2}\bar{a}_R} \quad \text{... (3)}$$

If a charge Q_1 is located at the center of the spherical coordinate system then unit vector $\bar{a}_R$ in the equation (3) becomes the radial unit vector $\bar{a}_r$ coming radially outwards from Q_1. And the distance R is the radius of the sphere r.

$$\therefore \quad \bar{E} = \frac{Q_1}{4\pi\varepsilon_0 r^2}\bar{a}_r \text{ in spherical system} \quad \text{... (4)}$$

2.3.1 Units of $\bar{E}$

The definition of electric field intensity is,

$$\bar{E} = \frac{\text{Force}}{\text{Unit charge}} = \frac{\text{(N) Newtons}}{\text{(C) Coulomb}}$$

Hence units of $\bar{E}$ is N/C. But the electric potential has units J/C i.e. Nm/C and hence $\bar{E}$ is also measured in units V/m (volts per metre). This unit is used practically to express $\bar{E}$.

2.3.2 Method of Obtaining $\bar{E}$ in Cartesian System

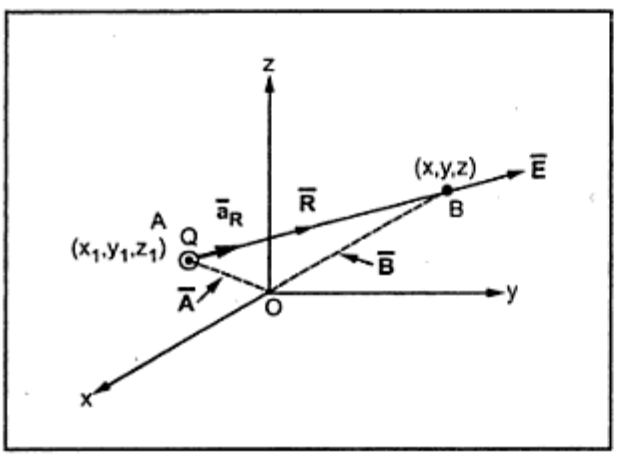

Fig. 2.9 $\bar{E}$ in cartesian system

Consider a charge Q_1 located at point $A(x_1, y_1, z_1)$ as shown in the Fig. 2.9. It is required to obtain $\bar{E}$ at any point $B(x, y, z)$ in the cartesian system. Then $\bar{E}$ at point B can be obtained using following steps :

Step 1 : Obtain the position vectors of points A and B.

$\therefore \quad \bar{r}_A = \bar{A}$ while $\bar{r}_B = \bar{B}$ from their coordinates

$$\therefore \quad \bar{A} = x_1\bar{a}_x + y_1\bar{a}_y + z_1\bar{a}_z \quad \text{and}$$

$$\bar{B} = x\bar{a}_x + y\bar{a}_y + z\bar{a}_z.$$

Step 2 : Find the distance vector $\bar{R}$ directed from A to B.

$$\therefore \quad \bar{R} = \bar{B} - \bar{A} = (x - x_1)\bar{a}_x + (y - y_1)\bar{a}_y + (z - z_1)\bar{a}_z$$

Step 3 : Find the unit vector $\bar{a}_R$ along the direction from A to B.

$$\therefore \quad \bar{a}_R = \frac{\bar{R}}{|\bar{R}|} = \frac{\bar{B} - \bar{A}}{|\bar{B} - \bar{A}|}$$

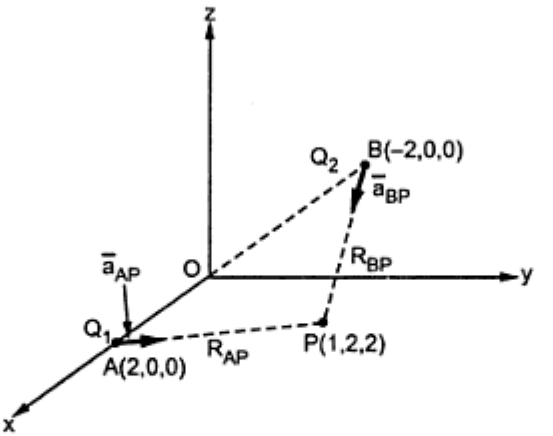

Fig. 2.13

$\bar{E}_A$ is field at P due to Q_1, and will act along $\bar{a}_{AP}$. $\bar{E}_B$ is field at P due to Q_2 and will act along $\bar{a}_{BP}$.

$$\therefore \quad \bar{E}_A = \frac{Q_1}{4\pi\varepsilon_0 R_{AP}^2}\bar{a}_{AP} = \frac{Q_1}{4\pi\varepsilon_0 R_{AP}^2} \times \frac{\bar{P}-\bar{A}}{|\bar{P}-\bar{A}|}$$

$$\therefore \quad \bar{E}_B = \frac{Q_2}{4\pi\varepsilon_0 R_{BP}^2}\bar{a}_{BP} = \frac{Q_2}{4\pi\varepsilon_0 R_{BP}^2} \times \frac{\bar{P}-\bar{B}}{|\bar{P}-\bar{B}|}$$

$$\therefore \bar{E} \text{ at } P = \bar{E}_A + \bar{E}_B = \frac{1}{4\pi\varepsilon_0}\left[\frac{Q_1}{R_{AP}^2}\frac{\bar{P}-\bar{A}}{|\bar{P}-\bar{A}|} + \frac{Q_2}{R_{BP}^2}\frac{\bar{P}-\bar{B}}{|\bar{P}-\bar{B}|}\right]$$

$$= \frac{1}{4\pi\varepsilon_0}\left[\frac{1[-\bar{a}_x + 2\bar{a}_y + 2\bar{a}_z]}{(\sqrt{9})^2\sqrt{(1)^2+(2)^2+(2)^2}} + \frac{Q_2[3\bar{a}_x + 2\bar{a}_y + 2\bar{a}_z]}{(\sqrt{17})^2\sqrt{(3)^2+(2)^2+(2)^2}}\right]$$

$$= \frac{1}{4\pi\varepsilon_0}\left[\frac{-\bar{a}_x + 2\bar{a}_y + 2\bar{a}_z}{27} + \frac{Q_2[3\bar{a}_x + 2\bar{a}_y + 2\bar{a}_z]}{70.0927}\right]$$

The y component of $\bar{E}$ must be zero.

$$\therefore \quad \frac{2}{27} + \frac{2Q_2}{70.0927} = 0$$

$$\therefore \quad Q_2 = -\frac{2}{27} \times \frac{70.0927}{2} = -2.596 \text{ C}$$

This is the required charge Q_2 to be placed at $(-2,0,0)$ which will make y component of $\bar{E}$ zero at point P.

2.4 Types of Charge Distributions

Uptill now the forces and electric fields due to only point charges are considered. In addition to the **point charges,** there is possibility of continuous charge distributions along a line, on a surface or in a volume. Thus there are four types of charge distributions which are,

1. Point charge 2. Line charge 3. Surface charge 4. Volume charge

2.4.1 Point Charge

It is seen that if the dimensions of a surface carrying charge are very very small compared to region surrounding it then the surface can be treated to be a point. The corresponding charge is called **point charge**. The point charge has a position but not the dimensions. This is shown in the Fig. 2.14 (a). The point charge can be positive or negative.

2.4.2 Line Charge

It is possible that the charge may be spreaded all along a line, which may be finite or infinite. Such a charge uniformly distributed along a line is called a **line charge.** This is shown in the Fig. 2.14 (b).

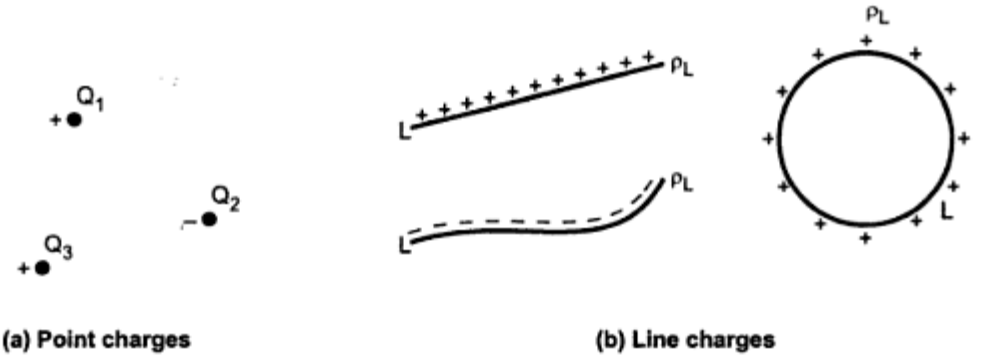

(a) Point charges (b) Line charges

Fig. 2.14 Charge distributions

The **charge density** of the line charge is denoted as ρ_L and defined as charge per unit length.

$$\therefore \quad \boxed{\rho_L = \frac{\text{Total charge in coulomb}}{\text{Total length in metres}} \quad (\text{C/m})}$$

Thus ρ_L is measured in C/m. The ρ_L is constant all along the length L of the line carrying the charge.

$$\therefore \quad \boxed{\rho_S = \frac{\text{Total charge in coulomb}}{\text{Total area in square metres}} \left(C / m^2\right)}$$

Thus ρ_S is expressed in C / m^2. The ρ_S is constant over the surface carrying the charge.

2.4.3.1 Method of Finding Q from ρ_S

In case of surface charge distribution, it is necessary to find the total charge Q by considering elementary surface area dS. The charge dQ on this differential area is given by ρ_S dS. Then integrating this dQ over the given surface, the total charge Q is to be obtained. Such an integral is called a **surface integral** and mathematically given by,

$$\boxed{Q = \int_S dQ = \int_S \rho_S \, dS} \quad \text{... (3)}$$

The plate of a charged parallel plate capacitor is an example of surface charge distribution. If the dimensions of the sheet of charge are very large compared to the distance at which the effects of charge are to be considered then the distribution is called infinite sheet of charge.

2.4.4 Volume Charge

If the charge distributed uniformly in a volume then it is called **volume charge**. The volume charge is shown in the Fig. 2.16.

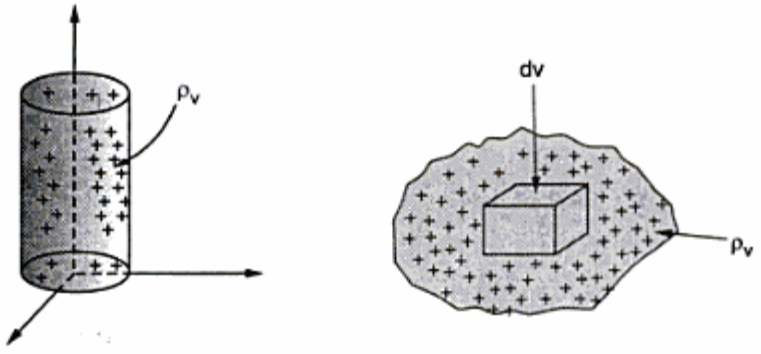

Fig. 2.16 Volume charge distribution

The **volume charge density** is denoted as ρ_v and defined as the charge per unit volume.

$$\boxed{\rho_v = \frac{\text{Total charge in coulomb}}{\text{Total volume in cubic metres}} \left(\frac{C}{m^3}\right)}$$

Thus ρ_v is expressed in C / m^3.

2.4.4.1 Method of Finding Q from ρ_v

In case of volume charge distribution, consider the differential volume dv as shown in the Fig. 2.16. Then the charge dQ possessed by the differential volume is $\rho_v dv$. Then the total charge within the finite given volume is to be obtained by integrating the dQ throughout that volume. Such an integral is called **volume integral**. Mathematically it is given by,

$$\boxed{Q = \int_{vol} \rho_v \, dv} \quad \text{... (4)}$$

The charged cloud is an example of volume charge.

Key Point : *In all the integrals line, surface and volume a single integral sign is used but practically for surface integral it becomes double integration while to integrate throughout the volume it becomes triple integration. Similarly ρ_S and ρ_v can be functions of the co-ordinates of the system used e.g. $\rho_S = 4xy$ C/m^2, $\rho_v = 20z\, e^{-0.2y}$ C/m^3 etc.*

Ex. 2.6 *Find the total charge inside a volume having volume charge density as $10z^2 e^{-0.1x} \sin \pi y$ C / m^3. The volume is defined between $-2 \le x \le 2$, $0 \le y \le 1$ and $3 \le z \le 4$.*

Sol. : Given $\rho_v = 10 z^2 e^{-0.1x} \sin \pi y$ C/m^3

Consider differential volume in cartesian system as,

$$dv = dx\, dy\, dz$$

$$\therefore \quad dQ = \rho_v \, dv = 10 z^2 e^{-0.1x} \sin \pi y \; dx\, dy\, dz$$

$$\therefore \quad Q = \int_{vol} \rho_v \, dv$$

But now it becomes triple integration

$$\therefore \quad Q = \int_{z=3}^{4} \int_{y=0}^{1} \int_{x=-2}^{2} 10 z^2 e^{-0.1x} \sin \pi y \; dx\, dy\, dz$$

$$= \int_{z=3}^{4} \int_{y=0}^{1} 10 z^2 \sin \pi y \left[\frac{e^{-0.1x}}{-0.1}\right]_{-2}^{2} dy\, dz$$

$$= \int_{z=3}^{4} 10 z^2 \left[-\frac{\cos \pi y}{\pi}\right]_0^1 \left[\frac{e^{-0.2}}{-0.1} - \frac{e^{+0.2}}{-0.1}\right] dz$$

$$= 10\left[\frac{z^3}{3}\right]_3^4 \left[\frac{-\cos \pi}{\pi} - \frac{-\cos 0}{\pi}\right] 4.0267$$

$$= 10\left[\frac{4^3 - 3^3}{3}\right]\left[\frac{1}{\pi} + \frac{1}{\pi}\right] 4.0267$$

$$= 316.162 \text{ C}$$

2.5 Electric Field Intensity Due to Various Charge Distributions

It is known that the electric field intensity due to a point charge Q is given by,

$$\bar{E} = \frac{Q}{4\pi\varepsilon_0 R^2}\bar{a}_R$$

Let us consider various charge distributions.

2.5.1 $\bar{E}$ Due to Line Charge

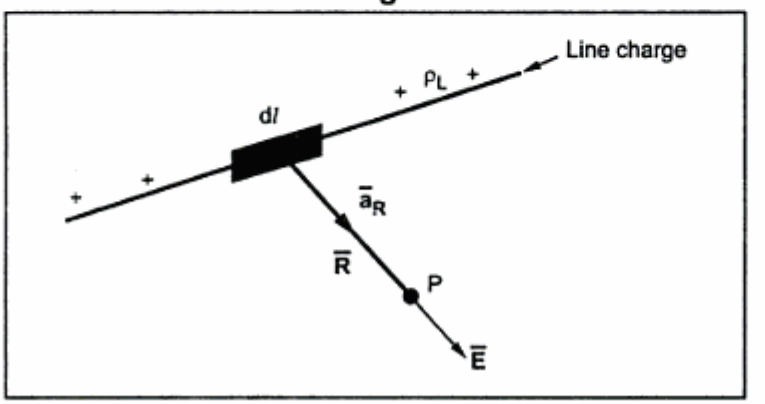

Fig. 2.17

Consider a line charge distribution having a charge density ρ_L as shown in the Fig. 2.17.

The charge dQ on the differential length d*l* is,

$$dQ = \rho_L \, dl$$

Hence the **differential electric field** $d\bar{E}$ at point P due to dQ is given by,

$$d\bar{E} = \frac{dQ}{4\pi\varepsilon_0 R^2}\bar{a}_R = \frac{\rho_L \, dl}{4\pi\varepsilon_0 R^2}\bar{a}_R \quad \text{... (1)}$$

Hence the total $\bar{E}$ at a point P due to line charge can be obtained by integrating $d\bar{E}$ over the length of the charge.

$$\therefore \quad \boxed{\bar{E} = \int_L \frac{\rho_L \, dl}{4\pi\varepsilon_0 R^2}\bar{a}_R} \quad \text{... (2)}$$

The $\bar{a}_R$ and dl is to be obtained depending upon the coordinate system used.

2.5.2 $\bar{E}$ Due to Surface Charge

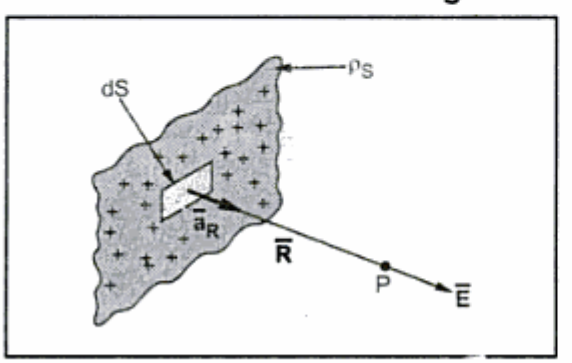

Fig. 2.18

Consider a surface charge distribution having a charge density ρ_S as shown in the Fig. 2.18.

The charge dQ on the differential surface area dS is,

$$dQ = \rho_S \, dS$$

where $\overline{E}_P, \overline{E}_l, \overline{E}_S$ and $\overline{E}_v$ are the field intensities due to point, line, surface and volume charge distributions respectively.

Let us discuss and learn the method of obtaining electric field intensities under widely varying charge distributions.

2.6 Electric Field Due to Infinite Line Charge

Consider an infinitely long straight line carrying uniform line charge having density ρ_L C/m. Let this line lies along z-axis from $-\infty$ to ∞ and hence called **infinite line charge**. Let point P is on y axis at which electric field intensity is to be determined. The distance of point P from the origin is 'r' as shown in the Fig. 2.20.

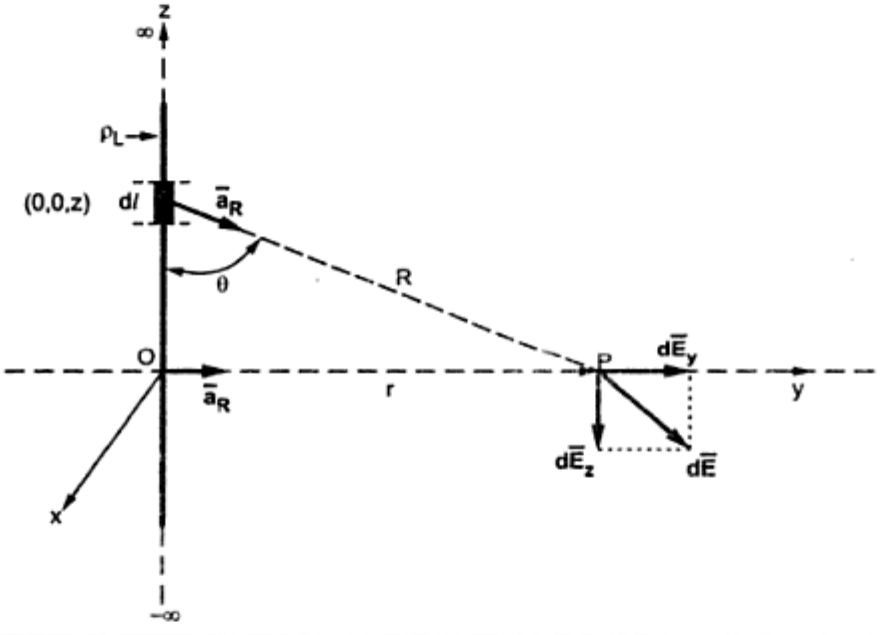

Fig. 2.20 Field due to infinite line charge

Consider a small differential length dl carrying a charge dQ, along the line as shown in the Fig. 2.20. It is along z axis hence $dl = dz$.

$$\therefore \qquad dQ = \rho_L \, dl = \rho_L \, dz \qquad \text{... (1)}$$

The coordinates of dQ are (0, 0, z) while the coordinates of point P are (0, r, 0). Hence the distance vector $\overline{R}$ can be written as,

$$\overline{R} = \overline{r}_P - \overline{r}_{dl} = \left[r\overline{a}_y - z\overline{a}_z\right]$$

$$\therefore \qquad |\overline{R}| = \sqrt{r^2 + z^2}$$

$$\therefore \qquad \overline{a}_R = \frac{\overline{R}}{|\overline{R}|} = \frac{r\overline{a}_y - z\overline{a}_z}{\sqrt{r^2 + z^2}} \qquad \text{... (2)}$$

$$\therefore \quad d\bar{E} = \frac{dQ}{4\pi\varepsilon_0 R^2}\bar{a}_R = \frac{\rho_L\, dz}{4\pi\varepsilon_0\left(\sqrt{r^2+z^2}\right)^2}\left[\frac{r\bar{a}_y - z\bar{a}_z}{\sqrt{r^2+z^2}}\right] \quad \text{... (3)}$$

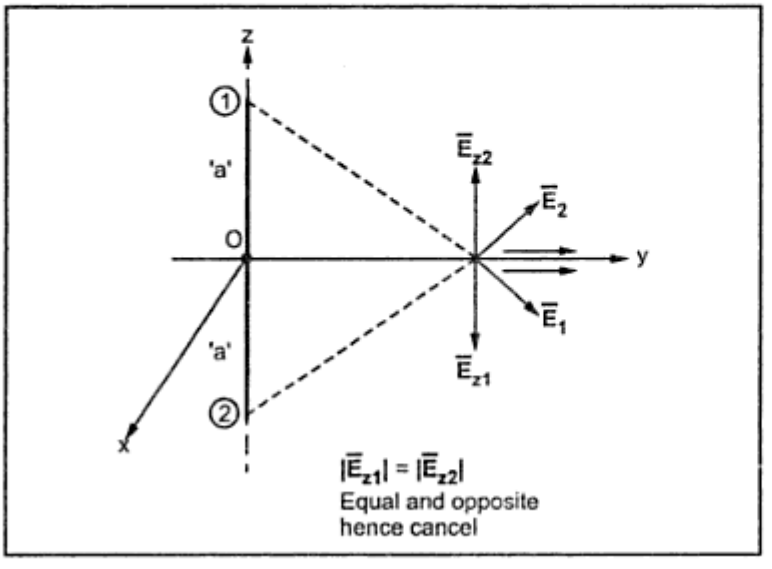

Fig. 2.21

Note : For every charge on positive z axis there is equal charge present on negative z axis. Hence the z component of electric field intensities produced by such charges at point P will cancell each other. Hence effectively there will not be any z component of $\bar{E}$ at P. This is shown in the Fig. 2.21.

Hence the equation of $d\bar{E}$ can be written by elliminating $\bar{a}_z$ component,

$$\therefore \quad d\bar{E} = \frac{\rho_L\, dz}{4\pi\varepsilon_0\left(\sqrt{r^2+z^2}\right)^2}\,\frac{r\bar{a}_y}{\sqrt{r^2+z^2}} \quad \text{... (4)}$$

Now by integrating $d\bar{E}$ over the z axis from $-\infty$ to ∞ we can obtain total $\bar{E}$ at point P.

$$\therefore \quad \bar{E} = \int_{-\infty}^{\infty} \frac{\rho_L}{4\pi\varepsilon_0\left(r^2+z^2\right)^{3/2}}\, r\, dz\,\bar{a}_y$$

Note : For such an integration, use the substitution

$$z = r\tan\theta \quad \text{i.e.} \quad r = \frac{z}{\tan\theta}$$

$$\therefore \quad dz = r\sec^2\theta\, d\theta$$

Here r is not the variable of integration.

$$\left.\begin{array}{l} \text{For } z = -\infty, \quad \theta = \tan^{-1}(-\infty) = -\pi/2 = -90^\circ \\ \text{For } z = +\infty, \quad \theta = \tan^{-1}(\infty) = \pi/2 = +90^\circ \end{array}\right\} \text{changing the limits}$$

$$\therefore \quad \bar{E} = \int_{\theta=-\pi/2}^{\pi/2} \frac{\rho_L}{4\pi\varepsilon_0 \left[r^2 + r^2 \tan^2\theta\right]^{3/2}} \, r \times r \sec^2\theta \, d\theta \, \bar{a}_y$$

$$= \frac{\rho_L}{4\pi\varepsilon_0} \int_{-\pi/2}^{\pi/2} \frac{r^2 \sec^2\theta \, d\theta}{r^3 \left[1+\tan^2\theta\right]^{3/2}} \, \bar{a}_y$$

But $\quad 1 + \tan^2\theta = \sec^2\theta$

$$\therefore \quad \bar{E} = \frac{\rho_L}{4\pi\varepsilon_0} \int_{-\pi/2}^{\pi/2} \frac{\sec^2\theta \, d\theta}{r \sec^3\theta} \, \bar{a}_y$$

$$= \frac{\rho_L}{4\pi\varepsilon_0 r} \int_{-\pi/2}^{\pi/2} \cos\theta \, d\theta \, \bar{a}_y \qquad \ldots \sec\theta = \frac{1}{\cos\theta}$$

$$= \frac{\rho_L}{4\pi\varepsilon_0 r} \left[\sin\theta\right]_{-\pi/2}^{\pi/2} \bar{a}_y = \frac{\rho_L}{4\pi\varepsilon_0 r} \left[\sin\frac{\pi}{2} - \sin\left(\frac{-\pi}{2}\right)\right] \bar{a}_y$$

$$= \frac{\rho_L}{4\pi\varepsilon_0 r} \left[1-(-1)\right] \bar{a}_y = \frac{\rho_L}{4\pi\varepsilon_0 r} \times 2 \, \bar{a}_y$$

$$\therefore \quad \boxed{\bar{E} = \frac{\rho_L}{2\pi\varepsilon_0 r} \, \bar{a}_y \quad \text{V/m}} \qquad \ldots (5)$$

Key Point : *If without considering symmetry of charges and without cancelling z component from $d\bar{E}$, if integration is carried out, it gives the same answer. The integration results the z component of $\bar{E}$ to be mathematically zero.*

The result of equation (5) which is specifically in cartesian system can be generalized. The $\bar{a}_y$ is unit vector along the distance r which is perpendicular distance of point P from the line charge. Thus in general $\bar{a}_y = \bar{a}_r$.

Hence the result of $\bar{E}$ can be expressed as,

$$\boxed{\bar{E} = \frac{\rho_L}{2\pi\varepsilon_0 r} \, \bar{a}_r \quad \text{V/m}} \qquad \ldots (6)$$

where r = Perpendicular distance of point P from the line charge

$\bar{a}_r$ = Unit vector in the direction of the perpendicular distance of point P from the line charge

Very important notes : 1. The field intensity $\bar{E}$ at any point has no component in the direction parallel to the line along which the charge is located and the charge is infinite. For example if line charge is parallel to z axis, $\bar{E}$ can not have $\bar{a}_z$ component, if line charge is parallel to y axis, $\bar{E}$ can not have $\bar{a}_y$ component. This makes the integration calculations easy.

2. The above equation consists r and $\bar{a}_r$ which **do not** have meanings of cylindrical coordinate system. The distance r is to be obtained by distance formula while $\bar{a}_r$ is unit vector in the direction of $\bar{r}$.

Key Point: *This result can be used as a standard result for solving other problems.*

2.7 Electric Field Due to Charged Circular Ring

Consider a charged circular ring of radius r placed in xy plane with centre at origin, carrying a charge uniformly along its circumference. The charge density is ρ_L C/m.

The point P is at a perpendicular distance 'z' from the ring as shown in the Fig. 2.22.

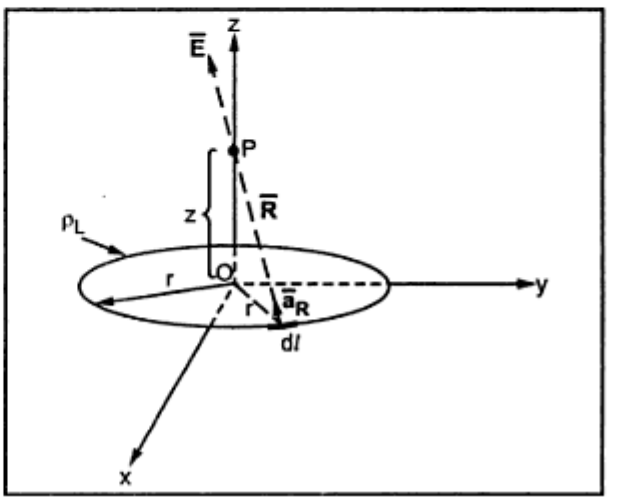

Fig. 2.22

Consider a small differential length dl on this ring. The charge on it is dQ.

$$\therefore \quad dQ = \rho_L \, dl$$

$$\therefore \quad d\bar{E} = \frac{\rho_L \, dl}{4\pi\varepsilon_0 R^2} \bar{a}_R \quad \text{... (1)}$$

where $\quad R$ = Distance of point P from dl

Consider the cylindrical coordinate system. For dl we are moving in ϕ direction where $dl = r\,d\phi$.

$$\therefore \quad dl = r\,d\phi \quad \text{... (2)}$$

Now $\quad R^2 = r^2 + z^2 \quad$ ... from Fig. 2.22

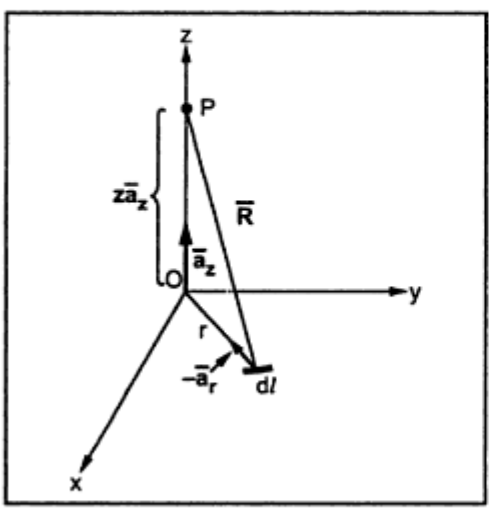

Fig. 2.23(a)

While $\bar{R}$ can be obtained from its two components, in cylindrical system as shown in the Fig. 2.23(a). The two components are,

1) distance r in the direction of $-\bar{a}_r$, radially inwards i.e. $-r\bar{a}_r$.

2) distance z in the direction of $\bar{a}_z$ i.e. $z\,\bar{a}_z$

$$\therefore \quad \bar{R} = -r\bar{a}_r + z\bar{a}_z \quad \text{... (3)}$$

Key Point: *This method can be used conveniently to obtain $\bar{R}$ by identifying its components in the direction of unit vectors in the co-ordinate system considered.*

$$\therefore \quad |\bar{R}| = \sqrt{(-r)^2 + (z)^2} = \sqrt{r^2 + z^2} \quad \text{... (4)}$$

$$\therefore \quad \bar{a}_R = \frac{\bar{R}}{|\bar{R}|} = \frac{-r\bar{a}_r + z\bar{a}_z}{\sqrt{r^2 + z^2}} \quad \text{... (5)}$$

$$\therefore \quad d\bar{E} = \frac{\rho_L \, dl}{4\pi\varepsilon_0 \left(\sqrt{r^2 + z^2}\right)^2} \times \frac{-r\bar{a}_r + z\bar{a}_z}{\sqrt{r^2 + z^2}}$$

$$\therefore \quad d\bar{E} = \frac{\rho_L (r \, d\phi)}{4\pi\varepsilon_0 (r^2 + z^2)^{3/2}} [-r\bar{a}_r + z\bar{a}_z] \quad \text{... (6)}$$

Note : The radial components of $\bar{E}$ at point P will be symmetrically placed in the plane parallel to xy plane and are going to cancel each other. This is shown in the Fig. 2.23 (b). Hence neglecting $\bar{a}_r$ component from $d\bar{E}$ we get,

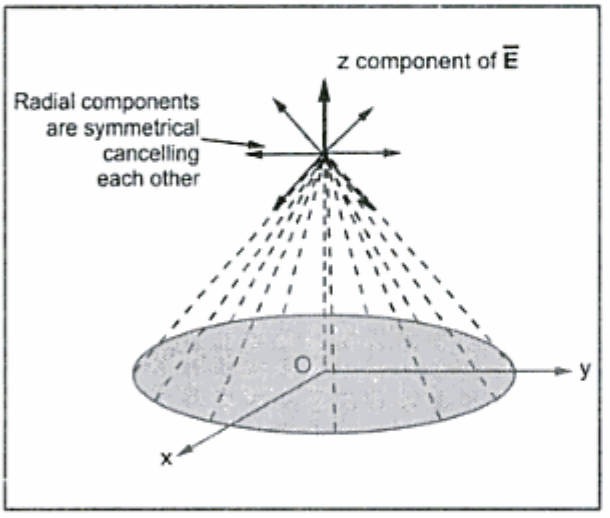

Fig. 2.23 (b)

$$d\bar{E} = \frac{\rho_L (r \, d\phi)}{4\pi\varepsilon_0 (r^2 + z^2)^{3/2}} z\bar{a}_z \quad \text{... (7)}$$

$$\therefore \quad \bar{E} = \int_{\phi=0}^{2\pi} \frac{\rho_L \, r \, d\phi}{4\pi\varepsilon_0 (r^2 + z^2)^{3/2}} z\bar{a}_z$$

$$= \frac{\rho_L \, r}{4\pi\varepsilon_0 (r^2 + z^2)^{3/2}} z \, \bar{a}_z \, [\phi]_0^{2\pi}$$

... Integration w.r.t. ϕ

$$\boxed{\therefore \quad \bar{E} = \frac{\rho_L \, r \, z}{2\varepsilon_0 (r^2 + z^2)^{3/2}} \bar{a}_z} \quad \text{... (8)}$$

where r = Radius of the ring

z = Perpendicular distance of point P from the ring along the axis of the ring

This is the electric field at a point P (0, 0, z) due to the circular ring of radius r placed in xy plane.

Ex. 2.7 *Prove that the electric field intensity at a point P located at a distance r from an infinite line charge with uniform charge density of ρ_L C/m is, $\bar{E} = \frac{\rho_L}{2\pi\varepsilon_0 r} \bar{a}_r$ in cylindrical coordinate system.*

Sol. : Consider that the line charge is located along z axis as shown in the Fig. 2.24.

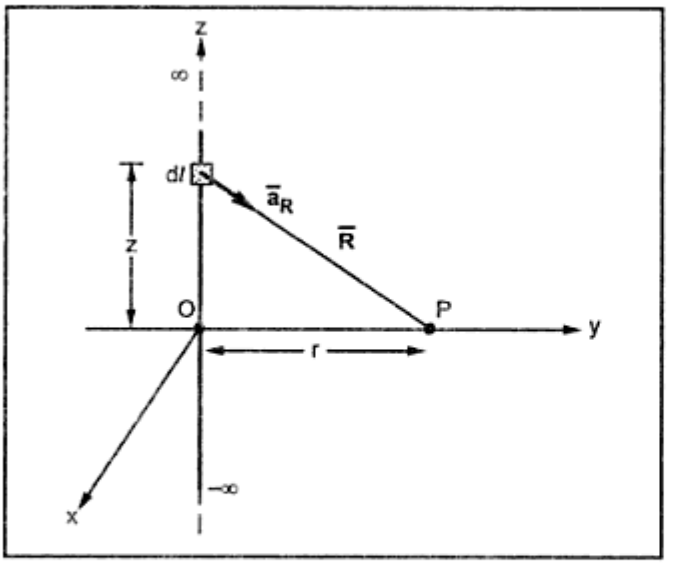

Fig. 2.24 (a)

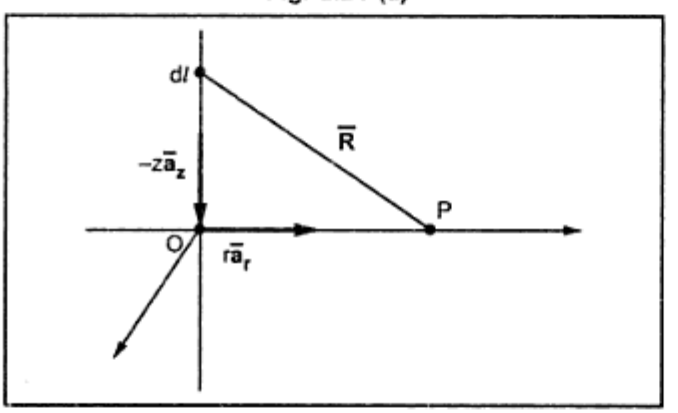

Fig. 2.24 (b)

Consider the differential length dl carrying the charge dQ.

Now $dl = dz$ ... along z axis

$\therefore\ dQ = \rho_L\, dl = \rho_L\, dz$

$$\therefore\ d\bar{E} = \frac{dQ}{4\pi\varepsilon_0 R^2}\,\bar{a}_R$$

In cylindrical coordinate system the distance vector $\bar{R}$ has two components as shown in the Fig. 2.24 (b).

1) The component along negative z direction i.e. $-z\,\bar{a}_z$

2) The component along $\bar{a}_r$ which is $r\,\bar{a}_r$. (Radial component).

$$\therefore\ \bar{R} = r\,\bar{a}_r - z\,\bar{a}_z$$

$$\therefore\ |\bar{R}| = \sqrt{(r)^2 + (-z)^2} = \sqrt{r^2 + z^2}$$

$$\therefore\ \bar{a}_R = \frac{\bar{R}}{|\bar{R}|} = \frac{r\bar{a}_r - z\bar{a}_z}{\sqrt{r^2 + z^2}}$$

$$\therefore\quad d\bar{E} = \frac{\rho_L\, dz}{4\pi\varepsilon_0\left(\sqrt{r^2+z^2}\right)^2}\left[\frac{r\bar{a}_r - z\bar{a}_z}{\sqrt{r^2+z^2}}\right]$$

Hence $\bar{E}$ can be obtained by integrating $d\bar{E}$ along z axis from $-\infty$ to ∞. It can be noted that due to symmetry z component will cancell in $\bar{E}$ but let us prove it mathematically.

$$\therefore\ \bar{E} = \int_{z=-\infty}^{z=\infty} \frac{\rho_L\, dz}{4\pi\varepsilon_0\left(r^2+z^2\right)^{3/2}}\left[r\bar{a}_r - z\bar{a}_z\right]$$

$$= \frac{\rho_L}{4\pi\varepsilon_0}\left[\int_{-\infty}^{\infty} \frac{r\, dz}{\left(r^2+z^2\right)^{3/2}}\,\bar{a}_r - \int_{-\infty}^{\infty} \frac{z\, dz}{\left(r^2+z^2\right)^{3/2}}\,\bar{a}_z\right] \quad \text{... Separating variables}$$

Put $\quad z = r\tan\theta \quad$ i.e. $\quad r = \dfrac{z}{\tan\theta}$

$\therefore \quad dz = r\sec^2\theta\, d\theta$

$$\left.\begin{aligned} &\text{For } z = -\infty, \quad \theta = \tan^{-1}(-\infty) = -\frac{\pi}{2} = -90^\circ \\ &\text{For } z = +\infty, \quad \theta = \tan^{-1}(\infty) = +\frac{\pi}{2} = +90^\circ \end{aligned}\right\} \quad \text{... Change of limits}$$

$$\therefore \bar{E} = \frac{\rho_L}{4\pi\varepsilon_0}\left\{\int_{\theta=-\pi/2}^{\theta=\pi/2} \frac{r \times r\sec^2\theta\, d\theta\, \bar{a}_r}{(r^2 + r^2\tan^2\theta)^{3/2}} - \int_{\theta=-\pi/2}^{\theta=\pi/2} \frac{r\tan\theta\, r\sec^2\theta\, d\theta\, \bar{a}_z}{(r^2 + r^2\tan^2\theta)^{3/2}}\right\}$$

$$= \frac{\rho_L}{4\pi\varepsilon_0}\left\{\int_{\theta=-\pi/2}^{\theta=\pi/2} \frac{r^2\sec^2\theta\, d\theta\, \bar{a}_r}{r^3\sec^3\theta} - \int_{\theta=-\pi/2}^{\theta=\pi/2} \frac{r\tan\theta\, r\sec^2\theta\, d\theta\, \bar{a}_z}{r^3\sec^3\theta}\right\} \quad \text{... } 1 + \tan^2\theta = \sec^2\theta$$

$$= \frac{\rho_L}{4\pi\varepsilon_0}\left\{\int_{\theta=-\pi/2}^{\theta=\pi/2} \frac{1}{r\sec\theta}\, d\theta\, \bar{a}_r - \int_{\theta=-\pi/2}^{\theta=\pi/2} \frac{1}{r}\frac{\sin\theta}{\cos\theta}\frac{1}{\sec\theta}\, d\theta\, \bar{a}_z\right\}$$

$$= \frac{\rho_L}{4\pi\varepsilon_0}\left\{\int_{\theta=-\pi/2}^{\theta=\pi/2} \frac{1}{r}\cos\theta\, d\theta\, \bar{a}_r - \int_{\theta=-\pi/2}^{\theta=\pi/2} \frac{1}{r}\sin\theta\, d\theta\, \bar{a}_z\right\} \quad \text{... } \frac{1}{\sec\theta} = \cos\theta$$

$$= \frac{\rho_L}{4\pi\varepsilon_0}\frac{1}{r}\left\{[\sin\theta]_{-\pi/2}^{\pi/2}\bar{a}_r - [-\cos\theta]_{-\pi/2}^{\pi/2}\bar{a}_z\right\}$$

$$= \frac{\rho_L}{4\pi\varepsilon_0}\frac{1}{r}\left\{\left[\sin\frac{\pi}{2} - \sin\left(-\frac{\pi}{2}\right)\right]\bar{a}_r - \left[-\cos\frac{\pi}{2} - \left(-\cos-\frac{\pi}{2}\right)\right]\bar{a}_z\right\}$$

$$= \frac{\rho_L}{4\pi\varepsilon_0}\frac{1}{r}\left\{[1-(-1)]\,\bar{a}_r - [0]\right\} \quad \text{... as } \cos\frac{\pi}{2} = \cos\frac{-\pi}{2} = 0$$

$$\therefore \quad \bar{E} = \frac{\rho_L}{4\pi\varepsilon_0 r}(2)\,\bar{a}_r = \frac{\rho_L}{2\pi\varepsilon_0 r}\,\bar{a}_r \quad \textbf{... Proved.}$$

Note : Mathematically also z component is getting cancelled. Hence looking at the symmetry and cancelling the terms, makes the mathematical exercise much more easier.

Ex. 2.8 *A uniform line charge ρ_L = 25 nC/m lies on the line x = –3 m and y = 4 m in free space. Find the electric field intensity at a point (2, 3, 15) m.* **[V.T.U. Aug-2000]**

Sol. : The line is shown in the Fig. 2.25. The line with x = – 3 constant and y = 4 constant is a line parallel to z axis as z can take any value. The $\bar{E}$ at P (2, 3, 15) is to be calculated.

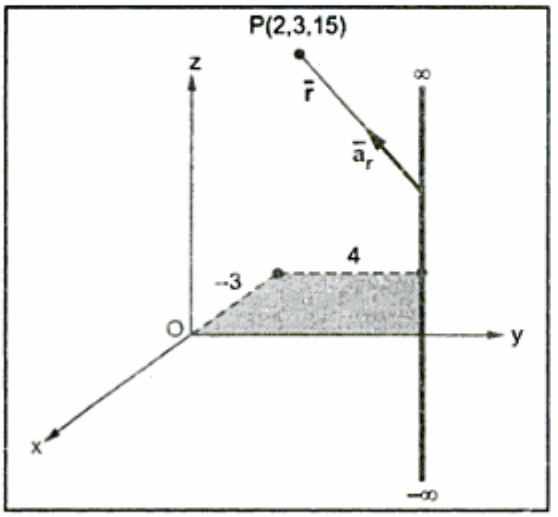

Fig. 2.25

The charge is infinite line charge hence $\bar{E}$ can be obtained by standard result,

$$\bar{E} = \frac{\rho_L}{2\pi\varepsilon_0 r}\bar{a}_r$$

To find $\bar{r}$, consider two points, one on the line which is (–3, 4, z) while P (2, 3, 15). But **as line is parallel to z axis, $\bar{E}$ can not have component in $\bar{a}_z$ direction hence z need not be considered while calculating $\bar{r}$.**

$$\therefore \quad \bar{r} = [2-(-3)]\bar{a}_x + [3-4]\bar{a}_y = 5\bar{a}_x - \bar{a}_y \qquad \text{... z not considered}$$

$$\therefore \quad |\bar{r}| = \sqrt{(5)^2 + (-1)^2} = \sqrt{26}$$

$$\therefore \quad \bar{a}_r = \frac{\bar{r}}{|\bar{r}|} = \frac{5\bar{a}_x - \bar{a}_y}{\sqrt{26}}$$

$$\therefore \quad \bar{E} = \frac{\rho_L}{2\pi\varepsilon_0}\cdot\frac{1}{\sqrt{26}}\left[\frac{5\bar{a}_x - \bar{a}_y}{\sqrt{26}}\right] = \frac{25\times10^{-9}\left[5\bar{a}_x - \bar{a}_y\right]}{2\pi\times 8.854\times10^{-12}\times 26}$$

$$= 86.42\ \bar{a}_x - 17.284\ \bar{a}_y \quad \text{V/m}$$

2.8 Electric Field Due to Infinite Sheet of Charge

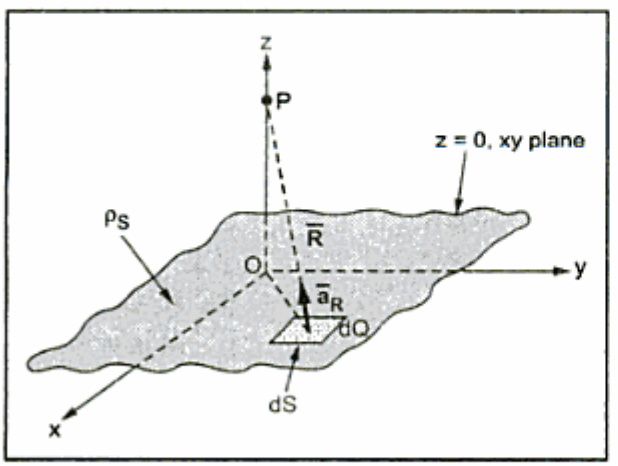

Fig. 2.26

Consider an infinite sheet of charge having uniform charge density ρ_S C / m², placed in xy plane as shown in the Fig. 2.26. Let us use cylindrical coordinates.

The point P at which $\bar{E}$ to be calculated is on z axis.

Consider the differential surface area dS carrying a charge dQ. The

Hence while integrating $d\bar{E}$ there is no need to consider $\bar{a}_r$ component. Though if considered, after integration procedure, it will get mathematically cancelled.

$$\therefore \quad \bar{E} = \int_{\phi=0}^{2\pi}\int_{r=0}^{\infty} d\bar{E} = \int_{0}^{2\pi}\int_{0}^{\infty} \frac{\rho_S\, r\, dr\, d\phi}{4\pi\varepsilon_0\left(r^2+z^2\right)^{3/2}}\left(z\bar{a}_z\right)$$

Put $r^2 + z^2 = u^2$ hence $2r\,dr = 2u\,du$

For $r = 0$, $u = z$ and $r = \infty$, $u = \infty$ ... changing limits

$$\therefore \quad \bar{E} = \int_{0}^{2\pi}\int_{u=z}^{\infty} \frac{\rho_S}{4\pi\varepsilon_0}\frac{u\,du}{\left(u^2\right)^{3/2}}\, d\phi\; z\,\bar{a}_z$$

$$= \int_{0}^{2\pi}\int_{u=z}^{\infty} \frac{\rho_S}{4\pi\varepsilon_0}\frac{du}{u^2}\, d\phi\,\left(z\,\bar{a}_z\right)$$

$$= \int_{0}^{2\pi} \frac{\rho_S}{4\pi\varepsilon_0}\, d\phi\; z\,\bar{a}_z\left[-\frac{1}{u}\right]_z^{\infty} \quad \text{... as } \int \frac{1}{u^2} = \int u^{-2} = \frac{u^{-1}}{-1} = -\frac{1}{u}$$

$$= \frac{\rho_S}{4\pi\varepsilon_0}\left[\phi\right]_0^{2\pi}\left(z\bar{a}_z\right)\left[-\frac{1}{\infty}-\left(-\frac{1}{z}\right)\right] = \frac{\rho_S}{4\pi\varepsilon_0}(2\pi)\,\bar{a}_z$$

$$\therefore \quad \bar{E} = \frac{\rho_S}{2\varepsilon_0}\,\bar{a}_z \ \text{V/m} \qquad \text{... For points above xy plane}$$

Now $\bar{a}_z$ is direction normal to differential surface area dS considered. Hence in general if $\bar{a}_n$ is direction normal to the surface containing charge, the above result can be generalized as,

$$\therefore \quad \boxed{\bar{E} = \frac{\rho_S}{2\varepsilon_0}\,\bar{a}_n \ \text{V/m}} \qquad \text{... (6)}$$

where $\bar{a}_n$ = Direction normal to the surface charge

Thus **for the points below xy plane,** $\bar{a}_n = -\bar{a}_z$ hence,

$$\therefore \quad \bar{E} = -\frac{\rho_S}{2\varepsilon_0}\,\bar{a}_z \ \text{V/m} \qquad \text{... For points below xy plane.}$$

Note : The equation (6) is standard result and can be used directly to solve the problems.

Key Point : *Thus electric field due to infinite sheet of charge is everywhere normal to the surface and its magnitude is independent of the distance of a point from the plane containing the sheet of charge.*

Important Observations :

1. $\bar{E}$ due to infinite sheet of charge at a point is not dependent on the distance of that point from the plane containing the charge.

2. The direction of $\bar{E}$ is perpendicular to the infinite charge plane.

3. The magnitude of $\bar{E}$ is constant every where and given by $|\bar{E}| = \rho_S / 2\varepsilon_0$.

Ex. 2.9 *Charge lies in y = – 5m plane in the form of an infinite square sheet with a uniform charge density of $\rho_S = 20\ nC/m^2$. Determine $\bar{E}$ at all the points.*

Sol. : The plane y = – 5 m constant is parallel to xz plane as shown in the Fig. 2.29.

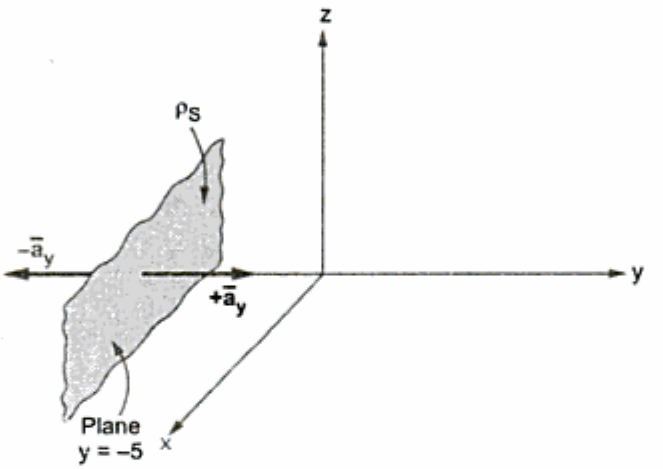

Fig. 2.29

For y > – 5, the $\bar{E}$ component will be along $+\bar{a}_y$ as normal direction to the plane y = – 5 m is $\bar{a}_y$.

$$\therefore \quad \bar{a}_n = \bar{a}_y$$

$$\therefore \quad \bar{E} = \frac{\rho_S}{2\varepsilon_0}\bar{a}_n = \frac{\rho_S}{2\varepsilon_0}\bar{a}_y$$

$$= \frac{20\times10^{-9}}{2\times8.854\times10^{-12}}\bar{a}_y = 1129.43\ \bar{a}_y \quad V/m$$

For y < – 5, the $\bar{E}$ component will be along $-\bar{a}_y$ direction, with same magnitude.

$$\therefore \quad \bar{E} = \frac{\rho_S}{2\varepsilon_0}\left(-\bar{a}_y\right) = -1129.43\ \bar{a}_y \quad V/m$$

At any point to the left or right of the plane, $|\bar{E}|$ is constant and acts normal to the plane.

Ex. 2.10 *Find $\bar{E}$ at P (1, 5, 2) m in free space if a point charge of 6 μC is located at (0,0,1), the uniform line charge density ρ_L = 180 nC/m along x axis and uniform sheet of charge with ρ_S = 25 nC/m² over the plane z = –1.*

Sol. : **Case 1 :** Point charge Q_1 = 6 μC at A (0, 0, 1) and P (1, 5, 2)

$$\therefore \quad \bar{E}_1 = \frac{Q_1}{4\pi\varepsilon_0 R_{AP}^2}\bar{a}_{AP} = \frac{Q_1}{4\pi\varepsilon_0 R_{AP}^2}\left[\frac{\bar{R}_{AP}}{|\bar{R}_{AP}|}\right]$$

$$\bar{R}_{AP} = (1-0)\bar{a}_x + (5-0)\bar{a}_y + (2-1)\bar{a}_z = \bar{a}_x + 5\bar{a}_y + \bar{a}_z$$

$$\therefore \quad |\bar{R}_{AP}| = \sqrt{(1)^2 + (5)^2 + (1)^2} = \sqrt{27}$$

$$\therefore \quad \bar{E}_1 = \frac{6\times10^{-6}}{4\pi\times8.854\times10^{-12}\times\left(\sqrt{27}\right)^2}\left[\frac{\bar{a}_x + 5\bar{a}_y + \bar{a}_z}{\sqrt{27}}\right]$$

$$\therefore \quad \bar{E}_1 = 384.375\,\bar{a}_x + 1921.879\,\bar{a}_y + 384.375\,\bar{a}_z \quad \text{V/m}$$

Case 2 : Line charge ρ_L along x axis.

It is infinite hence using standard result,

$$\bar{E}_2 = \frac{\rho_L}{2\pi\varepsilon_0 r}\bar{a}_r = \frac{\rho_L}{2\pi\varepsilon_0 r}\frac{\bar{r}}{|\bar{r}|}$$

Consider any point on line charge i.e. (x, 0, 0) while P (1, 5, 2). But as line is along x axis, no component of $\bar{E}$ will be along $\bar{a}_x$ direction. Hence while calculating $\bar{r}$ and $\bar{a}_r$, do not consider x co-ordinates of the points.

$$\therefore \quad \bar{r} = (5-0)\bar{a}_y + (2-0)\bar{a}_z = 5\bar{a}_y + 2\bar{a}_z$$

$$\therefore \quad |\bar{r}| = \sqrt{(5)^2 + (2)^2} = \sqrt{29}$$

$$\therefore \quad \bar{E}_2 = \frac{\rho_L}{2\pi\varepsilon_0\times\sqrt{29}}\left[\frac{5\bar{a}_y + 2\bar{a}_z}{\sqrt{29}}\right] = \frac{180\times10^{-9}\left[5\bar{a}_y + 2\bar{a}_z\right]}{2\pi\times8.854\times10^{-12}\times29}$$

$$= 557.859\,\bar{a}_y + 223.144\,\bar{a}_z \quad \text{V/m}$$

Case 3 : Surface charge ρ_S over the plane z = – 1. The plane is parallel to xy plane and normal direction to the plane is $\bar{a}_n = \bar{a}_z$, as point P is above the plane. At all the points above z = – 1 plane the $\bar{E}$ is constant along $\bar{a}_z$ direction.

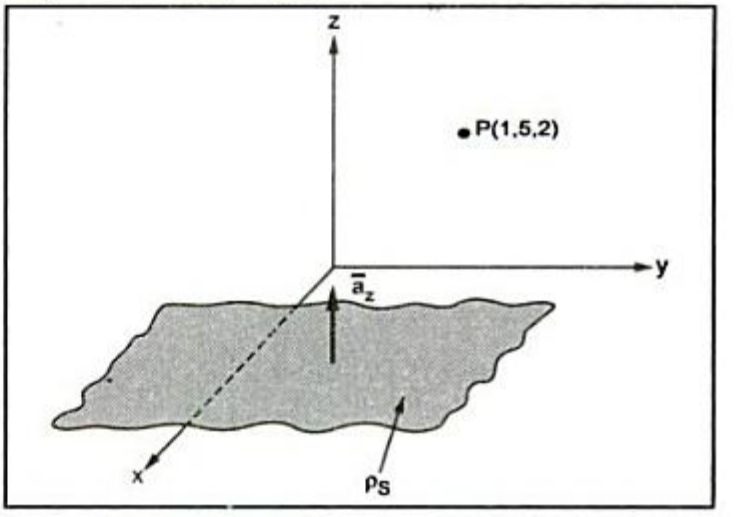

Fig. 2.30

$$|\bar{R}| = \sqrt{(-r)^2 + (3)^2} = \sqrt{r^2 + 9}$$

$$\therefore \quad \bar{a}_R = \frac{\bar{R}}{|\bar{R}|} = \frac{-r\,\bar{a}_r + 3\bar{a}_z}{\sqrt{r^2+9}}$$

$$\therefore \quad d\bar{E} = \frac{10^{-4}\,dr\,d\phi}{4\pi\varepsilon_0\left(\sqrt{r^2+9}\right)^2}\left[\frac{-r\,\bar{a}_r + 3\bar{a}_z}{\sqrt{r^2+9}}\right]$$

It can be seen that due to symmetry about z axis, all radial components will cancell each other. Hence there will not be any component of $\bar{E}$ along $\bar{a}_r$. So in integration $\bar{a}_r$ need not be considered.

$$\therefore \quad \bar{E} = \int_{\phi=0}^{2\pi}\int_{r=0}^{4} \frac{10^{-4}\,dr\,d\phi}{4\pi\varepsilon_0\left(r^2+9\right)^{3/2}}\,(3\bar{a}_z)$$

As there is no r dr in the numerator, use

$$r = 3\tan\theta, \quad dr = 3\sec^2\theta\,d\theta$$

$$\left.\begin{array}{ll} \text{For } r = 0, & \theta_1 = 0 \\ \text{For } r = 4, & \theta_2 = \tan^{-1} 4/3 \end{array}\right\} \quad \text{... Change of limits}$$

$$\therefore \quad \bar{E} = \int_{\phi=0}^{2\pi}\int_{\theta_1=0}^{\theta_2} \frac{10^{-4}\,3\sec^2\theta\,d\theta\,d\phi}{4\pi\varepsilon_0\left[9\tan^2\theta+9\right]^{3/2}}\,(3\bar{a}_z)$$

$$\therefore \quad \bar{E} = \int_{\phi=0}^{2\pi}\int_{\phi=0^\circ}^{\theta_2} \frac{299.5914\times10^3\sec^2\theta\,d\theta\,d\phi}{\left[1+\tan^2\theta\right]^{3/2}}\,\bar{a}_z$$

$$= \int_{\phi=0}^{2\pi}\int_{\theta_1=0^\circ}^{\theta_2} \frac{299.5914\times10^3}{\sec\theta}\,d\theta\,d\phi\,\bar{a}_z$$

$$= \int_{\phi=0}^{2\pi}\int_{\theta_1=0^\circ}^{\theta_2} 299.5914\times10^3\,d\theta\,d\phi\,[\cos\theta]\bar{a}_z$$

$$= 299.5914\times10^3\,[\phi]_0^{2\pi}\,[\sin\theta]_{\theta_1=0^\circ}^{\theta_2}\,\bar{a}_z \quad \text{... Separating variables}$$

$$= 1.8823\times10^6\,\sin\theta_2\,\bar{a}_z \quad \text{... } \sin 0^\circ = 0$$

Now $\quad \theta_2 = \tan^{-1}\dfrac{4}{3}$ i.e. $\tan\theta_2 = \dfrac{4}{3}$

$$\therefore \quad \sin\theta_2 = \frac{4}{5} = 0.8$$

$$\therefore \quad \bar{E} = 1.8823 \times 10^6 \times 0.8\ \bar{a}_z$$

$$= 1.5059 \times 10^6\ \bar{a}_z \text{ V/m}$$

$$= 1.5059\ \bar{a}_z \text{ MV/m}$$

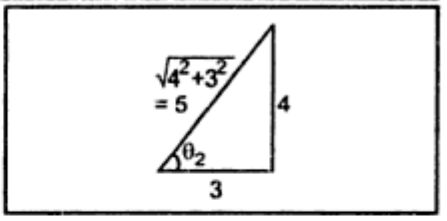

Fig. 2.33

Examples with Solutions

Ex. 2.12 *Q_1 and Q_2 are the point charges located at $(0,-4,3)$ and $(0,1,1)$. If Q_1 is 2nC, find Q_2 such that the force on a test charge at $(0,-3,4)$ has no z component.*

Sol. : The charges are shown in the Fig. 2.34.

The position vectors of the points A, B and C are,

$$\bar{A} = -4\bar{a}_y + 3\bar{a}_z$$

$$\bar{B} = \bar{a}_y + \bar{a}_z$$

$$\bar{C} = -3\bar{a}_y + 4\bar{a}_z$$

$$\therefore \quad \bar{R}_{1Q} = \bar{C} - \bar{A} = \bar{a}_y + \bar{a}_z$$

$$\text{and} \quad \bar{R}_{2Q} = \bar{C} - \bar{B} = -4\bar{a}_y + 3\bar{a}_z$$

$$\therefore \quad |\bar{R}_{1Q}| = \sqrt{(1)^2 + (1)^2} = \sqrt{2}$$

$$\text{and} \quad |\bar{R}_{2Q}| = \sqrt{(-4)^2 + (3)^2} = 5$$

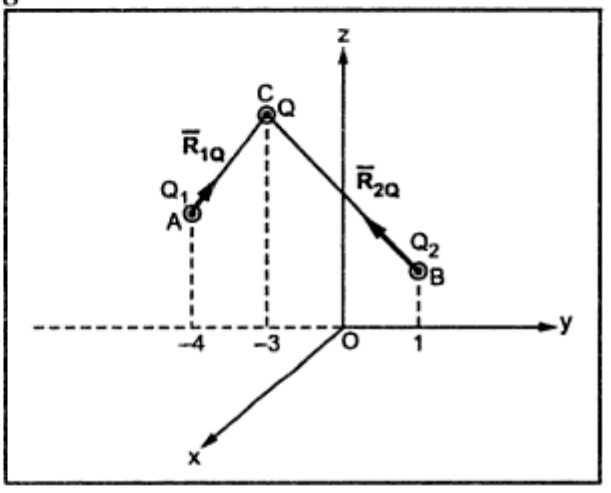

Fig. 2.34

$$\therefore \quad \bar{F}_1 = \text{Force on Q due to } Q_1 = \frac{Q\,Q_1}{4\pi\varepsilon_0 R_{1Q}^2}\ \bar{a}_{1Q}$$

$$\text{and} \quad \bar{F}_2 = \text{Force on Q due to } Q_2 = \frac{QQ_2}{4\pi\varepsilon_0 R_{2Q}^2}\ \bar{a}_{2Q}$$

$$\therefore \quad \bar{F}_t = \bar{F}_1 + \bar{F}_2 = \frac{Q}{4\pi\varepsilon_0}\left[\frac{Q_1}{R_{1Q}^2}\bar{a}_{1Q} + \frac{Q_2}{R_{2Q}^2}\bar{a}_{2Q}\right]$$

$$= \frac{Q}{4\pi\varepsilon_0}\left[\frac{2\times10^{-9}}{(\sqrt{2})^2}\left(\frac{\bar{a}_y + \bar{a}_z}{\sqrt{2}}\right) + \frac{Q_2}{(5)^2}\left(\frac{-4\bar{a}_y + 3\bar{a}_z}{5}\right)\right]$$

$$= \frac{Q}{4\pi\varepsilon_0}\left[7.071\times10^{-10}(\bar{a}_y + \bar{a}_z) + \frac{Q_2}{125}(-4\bar{a}_y + 3\bar{a}_z)\right]$$

$\therefore$ Total z component of $\overline{F}_t$ is,

$$= \frac{Q}{4\pi\varepsilon_0}\left[7.071\times10^{-10} + \frac{3Q_2}{125}\right]\overline{a}_z$$

To have this component zero,

$7.071\times10^{-10} + \frac{3Q_2}{125} = 0$ as Q is test charge and can not be zero.

$$\therefore \quad Q_2 = -\frac{7.071\times10^{-10}\times125}{3} = -29.462 \text{ nC}$$

Ex. 2.13 *In a Millikan oil drop experiment, the weight of a 1.6×10^{-14} kg drop is exactly balanced by the electric force in vertically directed 200 kV/m field. Calculate the charge on the drop in units of the electronic charge $(e = 1.6\times10^{-19}\text{ C})$.*

[M.U. May-2002]

Sol. : Given $E = 200$ kV/m, $m = 1.6\times10^{-14}$ kg

$$|E| = \frac{|F|}{Q}$$

$$\therefore \quad 200\times10^3 = \frac{|F|}{Q}$$

$$\therefore \quad |F| = 200\times10^3 Q \quad \text{N} \qquad \text{... (1)}$$

This is balanced by the weight mg

$$\therefore \quad |F| = mg = 1.6\times10^{-14}\times9.81$$

$$= 1.5696\times10^{-13} \text{ N} \qquad \text{... (2)}$$

Equating (1) and (2),

$$200\times10^3\, Q = 1.5696\times10^{-13}$$

$$\therefore \quad Q = 7.848\times10^{-19} \text{ C} \qquad \text{... Charge on drop}$$

Now $e = 1.6\times10^{-19}$ C hence Q in terms of e is,

$$Q = \frac{7.848\times10^{-19}}{1.6\times10^{-19}}$$

$$= 4.905e \text{ C}$$

Ex. 2.14 *In a free space, let Q_1 = 10 nC be at $P_1(0,-4,0)$ and Q_2 = 20 nC be at $P_2(0,0,4)$. Where should be a 40 nC point charge be located so that $\overline{E}$ = 0 at the origin.*

Sol. : The charges Q_1 and Q_2 are shown in the Fig. 2.35.

Let us find $\overline{E}$ at the origin due to Q_1 and Q_2.

$$\overline{P}_1 = -4\,\overline{a}_y\,, \quad \overline{P}_2 = 4\,\overline{a}_z$$

$$\therefore \quad \overline{a}_1 = \frac{-\overline{P}_1}{|\overline{P}_1|} = -\frac{-(-4\,\overline{a}_y)}{4} = \overline{a}_y$$

$$\text{and} \quad \overline{a}_2 = \frac{-\overline{P}_2}{|\overline{P}_2|} = \frac{-4\,\overline{a}_z}{4} = -\overline{a}_z$$

$$|R_{P_1O}| = 4 \text{ and } |R_{P_2O}| = 4$$

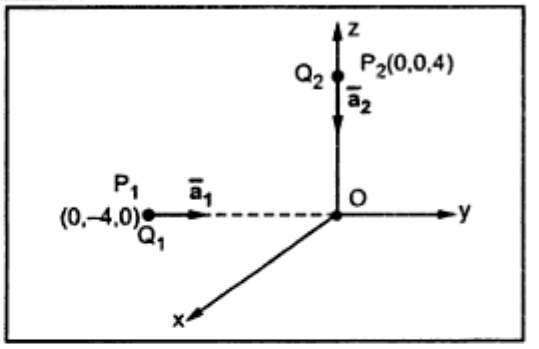

Fig. 2.35

$$\therefore \quad \overline{E} = \overline{E}_1 + \overline{E}_2 = \frac{Q_1}{4\pi\varepsilon_0 R^2_{P_1O}}\,\overline{a}_1 + \frac{Q_2}{4\pi\varepsilon_0 R^2_{P_2O}}\,\overline{a}_2$$

$$= \frac{10\times10^{-9}}{4\pi\varepsilon_0\times4^2}\left[\overline{a}_y\right] + \frac{20\times10^{-9}}{4\pi\varepsilon_0\times(4)^2}\left[-\overline{a}_z\right]$$

$$= 5.6173\,\overline{a}_y - 11.2346\,\overline{a}_z \quad \text{V/m}$$

Now let $Q_3 = 40$ nC is at point $P_3\,(x, y, z)$.

$$\therefore \quad \overline{P}_3 = x\,\overline{a}_x + y\,\overline{a}_y + z\,\overline{a}_z$$

$$\text{and} \quad R_{P_3O} = \sqrt{x^2 + y^2 + z^2}$$

The field intensity due to Q_3 at the origin is,

$$\overline{E}_3 = \frac{Q_3}{4\pi\varepsilon_0 R^2_{P_3O}}\,\overline{a}_{P_3O} = \frac{Q_3}{4\pi\varepsilon_0 R^2_{P_3O}}\,\frac{-x\overline{a}_x - y\,\overline{a}_y - z\overline{a}_z}{\sqrt{x^2 + y^2 + z^2}}$$

The total $\overline{E}$ has to be zero with $\overline{E}_3$ added to $\overline{E}_1$ and $\overline{E}_2$.

$$\therefore \quad \overline{E}_1 + \overline{E}_2 + \overline{E}_3 = 0$$

In $\overline{E}_1 + \overline{E}_2$, there is no x component and to have x component of $\overline{E}$ with $\overline{E}_3$ zero, $x = 0$.

The y component of $\overline{E}_3$ must cancel y component of $\overline{E}_1 + \overline{E}_2$.

$$\therefore -\frac{y\,Q_3}{4\pi\varepsilon_0 R^2_{P_3O}\sqrt{x^2 + y^2 + z^2}} = -5.6173$$

$$\text{Now} \quad |R_{P3O}| = \sqrt{x^2 + y^2 + z^2}$$

$$\therefore \quad \frac{y\,Q_3}{4\pi\varepsilon_0\left(x^2 + y^2 + z^2\right)\sqrt{x^2 + y^2 + z^2}} = 5.6173$$

$$\therefore \frac{y}{\left(x^2+y^2+z^2\right)^{3/2}} = \frac{5.6173 \times 4\pi\varepsilon_0}{40 \times 10^{-9}} = 0.01562 \qquad \ldots Q_3 = 40 \text{ nC}$$

But $x = 0$ hence,

$$\frac{y}{\left(y^2+z^2\right)^{3/2}} = 0.01562 \qquad \ldots \text{(a)}$$

Similarly z component of $\overline{E}_3$ must cancel z component of $\overline{E}_1 + \overline{E}_2$.

$$\therefore \frac{-z\,Q_3}{4\pi\varepsilon_0 R_{P_3O}^2 \sqrt{x^2+y^2+z^2}} = 11.2346$$

Substituting Q_3, R_{P_3O} and $x = 0$ we get,

$$\therefore \frac{z}{\left(y^2+z^2\right)^{3/2}} = -0.03124 \qquad \ldots \text{(b)}$$

From (a), $\left(y^2+z^2\right)^{3/2} = \dfrac{y}{0.01562} = 64.0204\ y$

Putting in (b), $\dfrac{z}{64.0204\ y} = -0.03124$

$$\therefore \qquad z = -2\,y \qquad \ldots \text{(c)}$$

Using (c) in (a),

$$\frac{y}{\left[y^2+(-2y)^2\right]^{3/2}} = 0.01562$$

$$\therefore \frac{y}{\left[y^2+4y^2\right]^{3/2}} = 0.01562$$

$$\therefore \qquad \frac{y}{5^{3/2}\,y^3} = 0.01562$$

$$\therefore \qquad y^2 = 5.7261$$

$$\therefore \qquad y = \pm 2.3929 \quad \text{and} \quad z = \mp 4.7858$$

But y must be positive and z must be negative in P_3, to get $\overline{E} = 0$

Hence Q_3 must be located at (0, + 2.3929, – 4.7858) to have $\overline{E}$ zero at origin.

Ex. 2.15 *The charge is distributed along the z axis from z = – 5m to –∞ and z = +5 m to +∞ with a charge density of 20 nC/m. Find $\overline{E}$ at (2,0,0) m. Also express the answer in cylindrical coordinates.* **[P.U. Dec-98, 2000, M.U. Dec-2001]**

Sol. : The charge is shown as in the Fig. 2.36.

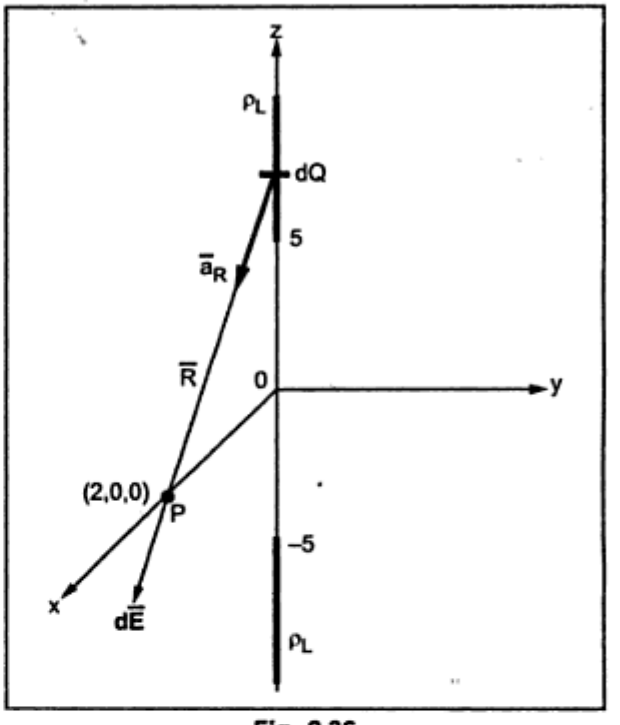

Fig. 2.36

Key Point : *If ρ_L is not distributed all along the length then standard result can not be used. The basic procedure is to be used.*

As charge is not infinite, let us use basic procedure of considering differential charge.

Consider the differential element d*l* in the z direction hence,

$$dl = dz$$

$$\therefore\ dQ = \rho_L\, dl = \rho_L\, dz$$

$$\therefore\ d\overline{E} = \frac{dQ}{4\pi\varepsilon_0 R^2}\,\overline{a}_R = \frac{\rho_L\, dz}{4\pi\varepsilon_0 R^2}\,\overline{a}_R$$

Any point on z axis is (0, 0, z) while point P at which $\overline{E}$ to be calculated is (2,0,0).

$$\overline{R} = (2-0)\overline{a}_x + (0-z)\overline{a}_z = 2\overline{a}_x - z\overline{a}_z$$

$$|\overline{R}| = \sqrt{(2)^2 + (-z)^2} = \sqrt{4+z^2}$$

$$\therefore\quad \overline{a}_R = \frac{\overline{R}}{|\overline{R}|} = \frac{2\overline{a}_x - z\overline{a}_z}{\sqrt{4+z^2}}$$

$$\therefore\quad d\overline{E} = \frac{\rho_L\, dz}{4\pi\varepsilon_0\left(\sqrt{4+z^2}\right)^2}\left[\frac{2\overline{a}_x - z\overline{a}_z}{\sqrt{4+z^2}}\right]$$

$$= \frac{\rho_L\, dz}{4\pi\varepsilon_0\left(4+z^2\right)^{3/2}}\left(2\overline{a}_x - z\overline{a}_z\right)$$

Now there is no charge between – 5 to 5 hence to find $\overline{E}$, $d\overline{E}$ to be integrated in two zones –∞ to – 5 and 5 to ∞ in z direction.

$$\therefore\quad \overline{E} = \int_{-\infty}^{-5} d\overline{E} + \int_{5}^{\infty} d\overline{E}$$

Looking at the symmetry it can be observed that z component of $\overline{E}$ produced by charge between 5 to ∞ will cancel the z component of $\overline{E}$ produced by charge between – 5 to $-\infty$. Hence for integration $\overline{a}_z$ component from $d\overline{E}$ can be neglected.

$$\therefore \qquad \overline{E} = \int_{-\infty}^{-5} \frac{\rho_L \, dz(2\overline{a}_x)}{4\pi\varepsilon_0 (4+z^2)^{3/2}} + \int_{5}^{\infty} \frac{\rho_L \, dz(2\overline{a}_x)}{4\pi\varepsilon_0 (4+z^2)^{3/2}}$$

Put $\qquad z = 2\tan\theta$

$$\therefore \qquad dz = 2\sec^2\theta \, d\theta$$

For $z = -\infty$, $\theta = -\pi/2$, For $z = -5$, $\theta = \tan^{-1} -\frac{5}{2} = -68.19°$

For $z = +\infty$, $\theta = +\pi/2$, For $z = +5$, $\theta = \tan^{-1} \frac{5}{2} = 68.19°$

$$\therefore \overline{E} = \frac{2\rho_L \overline{a}_x}{4\pi\varepsilon_0} \left\{ \int_{\theta=-90°}^{\theta=-68.19°} \frac{2\sec^2\theta \, d\theta}{(4+4\tan^2\theta)^{3/2}} + \int_{\theta=68.19°}^{\theta=90°} \frac{2\sec^2\theta \, d\theta}{(4+4\tan^2\theta)^{3/2}} \right\}$$

$$= \frac{2\rho_L \overline{a}_x}{4\pi\varepsilon_0} \left\{ \int_{\theta=-90°}^{\theta=-68.19°} \frac{2\sec^2\theta \, d\theta}{4^{3/2}\sec^3\theta} + \int_{\theta=68.19°}^{\theta=90°} \frac{2\sec^2\theta \, d\theta}{4^{3/2}\sec^3\theta} \right\}$$

$$= \frac{2\rho_L \overline{a}_x (2)}{4\pi\varepsilon_0 (4^{3/2})} \left\{ \int_{\theta=-90°}^{\theta=-68.19°} \frac{1}{\sec\theta} d\theta + \int_{\theta=68.19°}^{\theta=90°} \frac{1}{\sec\theta} d\theta \right\}$$

$$= \frac{\rho_L \overline{a}_x}{8\pi\varepsilon_0} \left\{ [\sin\theta]_{-90°}^{-68.19°} + [\sin\theta]_{68.19°}^{90°} \right\}$$

$$= \frac{20\times10^{-9} \overline{a}_x}{8\pi\times8.854\times10^{-19}} \{\sin(-68.19°) - \sin(-90°) + \sin(90°) - \sin(68.19°)\}$$

$$= 12.87 \, \overline{a}_x \approx 13 \, \overline{a}_x \quad \text{V/m}$$

To find cylindrical coordinates find the dot product of $\overline{E}$ with $\overline{a}_r, \overline{a}_\phi$ and $\overline{a}_z$, at point P, referring table of dot products of unit vectors.

$$\therefore \qquad E_r = \overline{E} \cdot \overline{a}_r = 13\overline{a}_x \cdot \overline{a}_r = 13\cos\phi$$

$$\therefore \qquad E_\phi = \overline{E} \cdot \overline{a}_\phi = 13\overline{a}_x \cdot \overline{a}_\phi = -13\sin\phi$$

$$\therefore \qquad E_z = \overline{E} \cdot \overline{a}_z = 13\overline{a}_x \cdot \overline{a}_z = 0$$

At point P, x = 2, y = 0, z = 0

$$\therefore \quad r = \sqrt{x^2 + y^2} = 2 \quad \text{and} \quad \phi = \tan^{-1}\frac{y}{x} = \tan^{-1} 0 = 0°$$

$$\therefore \quad \cos\phi = 1 \quad \text{and} \quad \sin\phi = 0$$

$$\therefore \quad E_r = 13, \quad E_\phi = 0, \quad E_z = 0$$

Hence the cylindrical coordinate systems $\overline{E}$ is,

$$\overline{E} = E_r\,\overline{a}_r + E_\phi\,\overline{a}_\phi + E_z\,\overline{a}_z$$

$$\therefore \quad \overline{E} = 13\,\overline{a}_r \ \text{V/m}$$

Ex. 2.16 *A uniform line charge with charge density $\lambda = 5\ \mu C/m$ lies along x axis. Show that $\overline{E}$ at (3, 2, 1) is given by,*

$$\overline{E} = \frac{0.356}{\varepsilon_0}\left(\frac{2\overline{a}_y + \overline{a}_z}{\sqrt{5}}\right)\mu V/m$$

[M.U. May-97]

Sol. : The line charge is shown in the Fig. 2.37.

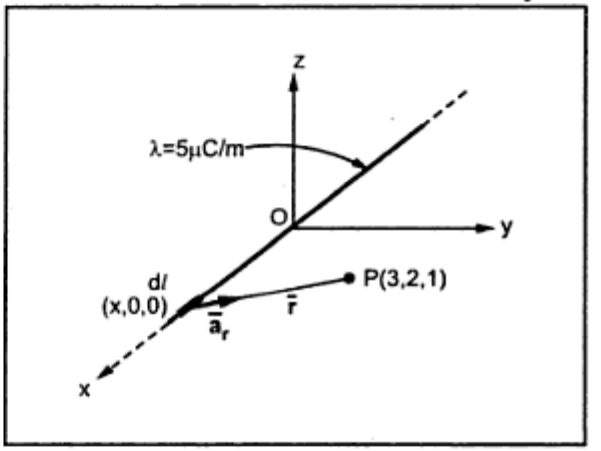

Fig. 2.37

As the charge is infinite line charge, the field $\overline{E}$ can be obtained by standard result.

$$\therefore \quad \overline{E} = \frac{\rho_L}{2\pi\varepsilon_0 r}\,\overline{a}_r$$

Now the line charge is along x axis hence $\overline{E}$ will not have any component along $\overline{a}_x$ direction. Hence while finding $\overline{r}$ and $\overline{a}_r$, x coordinate should not be considered.

$$\therefore \quad \overline{r} = (2-0)\overline{a}_y + (1-0)\overline{a}_z = 2\,\overline{a}_y + \overline{a}_z \qquad \text{... x not considered}$$

$$\therefore \quad |\overline{r}| = \sqrt{2^2 + 1^2} = \sqrt{5}$$

$$\therefore \quad \overline{a}_r = \frac{|\overline{r}|}{|\overline{r}|} = \frac{2\overline{a}_y + \overline{a}_z}{\sqrt{5}}$$

$$\rho_L = \lambda = 5\ \mu C/m$$

$$\therefore \quad \overline{E} = \frac{5\times10^{-6}}{2\pi\times\varepsilon_0\times(\sqrt{5})}\left[\frac{2\overline{a}_y + \overline{a}_z}{\sqrt{5}}\right] = \frac{3.558\times10^{-7}}{\varepsilon_0}\left[\frac{2\overline{a}_y + \overline{a}_z}{\sqrt{5}}\right]$$

$$= \frac{0.356}{\varepsilon_0}\left[\frac{2\overline{a}_y + \overline{a}_z}{\sqrt{5}}\right]\mu V/m \qquad \text{... Proved}$$

Ex. 2.17 *A line charge density ρ_L = 24 nC/m is located in free space on the line y = 1 and z = 2 m.*
a) Find $\bar{E}$ at the point P (6, –1, 3).
b) What point charge Q_A should be located at A (–3, 4, 1) to make y component of total $\bar{E}$ zero at point P.

Sol. : a) The line charge is shown in the Fig. 2.38.

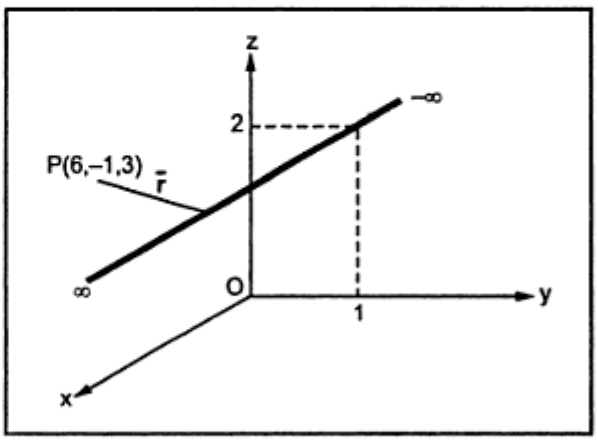

Fig. 2.38

It is parallel to the x axis as y = 1 constant and z = 2 constant. The line charge is infinite hence using the standard result,

$$\bar{E} = \frac{\rho_L}{2\pi\varepsilon_0 r}\bar{a}_r$$

To find $\bar{a}_r$, consider a point on the line charge (x, 1, 2) while P (6, –1, 3). As the line charge is parallel to x axis, do not consider x coordinate while finding $\bar{a}_r$.

$$\therefore \quad \bar{r} = (-1-1)\bar{a}_y + (3-2)\bar{a}_z = -2\bar{a}_y + \bar{a}_z$$

$$\therefore \quad |\bar{r}| = \sqrt{(-2)^2 + (1)^2} = \sqrt{5}$$

$$\therefore \quad \bar{a}_r = \frac{\bar{r}}{|\bar{r}|} = \frac{-2\bar{a}_y + \bar{a}_z}{\sqrt{5}}$$

$$\therefore \quad \bar{E} = \frac{\rho_L}{2\pi\varepsilon_0\sqrt{5}}\left[\frac{-2\bar{a}_y + \bar{a}_z}{\sqrt{5}}\right] = \frac{24\times10^{-9}\left(-2\bar{a}_y + \bar{a}_z\right)}{2\pi\times8.854\times10^{-12}\times5}$$

$$= -172.564\,\bar{a}_y + 86.282\,\bar{a}_z \text{ V/m}$$

b) Consider a point charge Q_A at A (–3, 4, 1).

The electric field due to Q_A at P (6, –1, 3) is,

$$\bar{E}_A = \frac{Q_A}{4\pi\varepsilon_0 R_{AP}^2}\bar{a}_{AP}$$

$$\bar{R}_{AP} = [6-(-3)]\bar{a}_x + [-1-4]\bar{a}_y + [3-1]\bar{a}_z = 9\bar{a}_x - 5\bar{a}_y + 2\bar{a}_z$$

$$|\bar{R}_{AP}| = \sqrt{(9)^2 + (-5)^2 + (2)^2} = 10.4888$$

$$\therefore \quad \bar{a}_{AP} = \frac{\bar{R}_{AP}}{|\bar{R}_{AP}|} = \frac{9\bar{a}_x - 5\bar{a}_y + 2\bar{a}_z}{10.4888}$$

$$\therefore \quad \overline{E}_A = \frac{Q_A}{4\pi\varepsilon_0 \times (10.4888)^2}\left[\frac{9\overline{a}_x - 5\overline{a}_y + 2\overline{a}_z}{10.4888}\right]$$

The total field at P is now,

$$\overline{E}_t = \overline{E} + \overline{E}_A$$

The y component of total $\overline{E}_t$ is to be made zero.

$$\therefore \quad \left[-172.564 - \frac{5\,Q_A}{4\pi\varepsilon_0 \times (10.4888)^3}\right]\overline{a}_y = 0$$

$$\therefore \quad \frac{5Q_A}{4\pi\varepsilon_0 \times (10.4888)^3} = -172.564$$

$$\therefore \quad Q_A = \frac{-172.564 \times 4\pi \times 8.854 \times 10^{-12} \times (10.4888)^3}{5}$$

$$= -4.4311\ \mu C$$

Ex. 2.18 *A circular ring of charge with radius 5 m lies in z = 0 plane with centre at origin. If the ρ_L = 10 nC/m, find the point charge Q placed at the origin which will produce same $\overline{E}$ at the point (0, 0, 5) m.*

Sol. : The ring is shown in the Fig. 2.39 (a), in z = 0 i.e. xy plane.

The point P (0, 0, 5) m. Consider the differential length dl of the ring. It is in the ϕ direction hence $dl = r\,d\phi$.

The charge on dl is $dQ = \rho_L\,dl$

$$\therefore \quad dQ = \rho_L\, r\, d\phi$$

$$\therefore \quad d\overline{E} = \frac{dQ}{4\pi\varepsilon_0 R^2}\overline{a}_R$$

$$= \frac{\rho_L\, r\, d\phi}{4\pi\varepsilon_0 R^2}\overline{a}_R$$

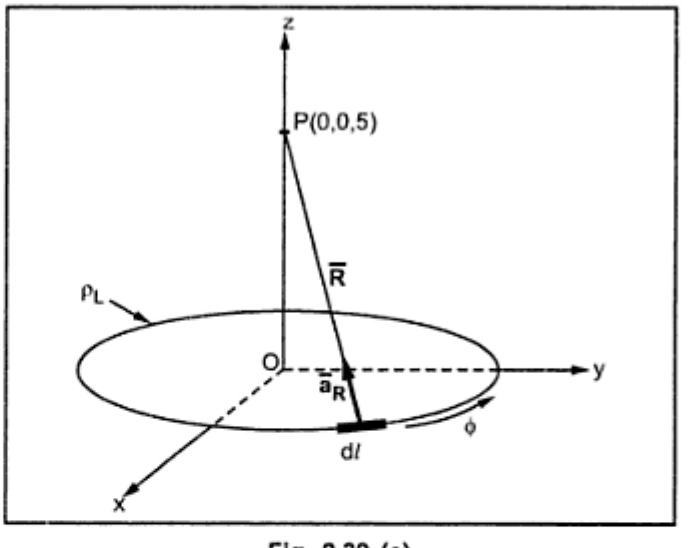

Fig. 2.39 (a)

Now $\overline{a}_R = \frac{\overline{R}}{|\overline{R}|}$ and $\overline{R}$ can be resolved into two components as shown in the Fig. 2.39 (b).

The two components in cylindrical coordinate system are,

1. Along $-\bar{a}_r$ direction i.e. $-r\bar{a}_r$.

2. And z component in $\bar{a}_z$ direction i.e. $z\,\bar{a}_z$.

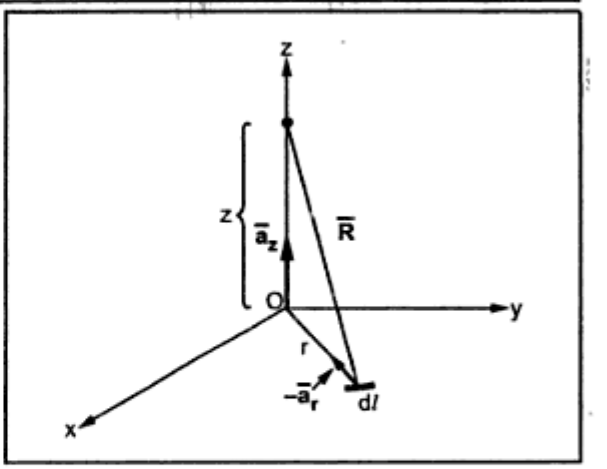

Fig. 2.39 (b)

$$\therefore \quad \bar{R} = -r\,\bar{a}_r + z\bar{a}_z$$

$$\text{hence} \quad |\bar{R}| = \sqrt{(r)^2 + z^2}$$

$$\therefore \quad \bar{a}_R = \frac{\bar{R}}{|\bar{R}|} = \frac{-r\bar{a}_r + z\bar{a}_z}{\sqrt{r^2 + z^2}}$$

$$\therefore \quad d\bar{E} = \frac{\rho_L\, r\, d\phi}{4\pi\varepsilon_0\left(\sqrt{r^2+z^2}\right)^2}\left[\frac{-r\bar{a}_r + z\bar{a}_z}{\sqrt{r^2+z^2}}\right]$$

Note : The $\bar{E}$ at P will have two components, in radial direction and z direction but radial components are symmetrical about z axis, from all the points of the ring and hence will cancel each other. So there is **no need to consider $\bar{a}_r$ component in integration.** Though if considered, mathematically will get cancelled.

$$\therefore \quad \bar{E} = \int_{\phi=0}^{\phi=2\pi} \frac{\rho_L\, r\, d\phi}{4\pi\varepsilon_0\left(r^2+z^2\right)^{3/2}}\, z\bar{a}_z \qquad \text{... Limit for } \phi = 0 \text{ to } 2\pi$$

$$= \frac{\rho_L\, r\, z}{4\pi\varepsilon_0\left(r^2+z^2\right)^{3/2}}\left[\int_0^{2\pi} d\phi\right]\bar{a}_z \qquad \text{... } r = 5\text{ m},\ z = 5\text{m}$$

$$= \frac{\rho_L\, r\, z}{4\pi\varepsilon_0\left(r^2+z^2\right)^{3/2}}(2\pi)\,\bar{a}_z = \frac{10\times10^{-9}\times5\times5\times2\pi}{4\pi\times8.854\times10^{-12}\times[25+25]^{3/2}}\,\bar{a}_z$$

$$\therefore \quad \bar{E} = 39.9314\ \bar{a}_z\ \text{V/m} \qquad \text{... (1)}$$

Let Q be the point charge at the origin. From Q to point P, the distance vector $\bar{R} = 5\,\bar{a}_z$.

$$\therefore\ \bar{E} \text{ due to Q at P} = \frac{Q}{4\pi\varepsilon_0 R^2}\,\bar{a}_R$$

$$\text{where} \quad \bar{a}_R = \frac{\bar{R}}{|\bar{R}|} = \frac{5\bar{a}_z}{5} = \bar{a}_z$$

$$\therefore\ \bar{E} \text{ due to Q at P} = \frac{Q}{4\pi\varepsilon_0 (5)^2}\bar{a}_z \qquad \text{... (2)}$$

Equating (1) and (2),

$$\frac{Q}{4\pi\varepsilon_0 \times 25} = 39.9314$$

$$\therefore \qquad Q = 111.071 \text{ nC}$$

Ex. 2.19 *A line charge density ρ_L is uniformly distributed over a length of 2a with centre as origin along x axis. Find $\bar{E}$ at a point P which is on the z axis at a distance d.*

[P.U. May-2000]

Sol. : The line charge is shown in the Fig. 2.40. As the charge distribution is not uniform, let us use the basic method of differential length. Consider differential length dl along the line charge. As it is along x axis, $dl = dx$.

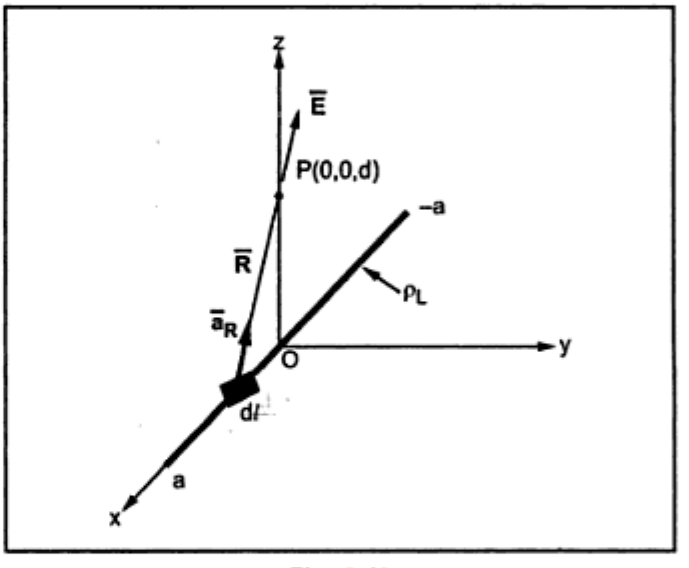

Fig. 2.40

$$\therefore \qquad dQ = \rho_L\, dl$$

$$= \rho_L\, dx$$

$$\text{Now} \quad d\bar{E} = \frac{dQ}{4\pi\varepsilon_0 R^2}\bar{a}_R$$

$$= \frac{\rho_L\, dx}{4\pi\varepsilon_0 R^2}\bar{a}_R$$

To find $\bar{R}$, consider any point on the line charge which is say (x, 0, 0). And point P (0, 0, d).

$$\therefore \qquad \bar{R} = (0-x)\bar{a}_x + (d-0)\bar{a}_z = -x\bar{a}_x + d\bar{a}_z$$

$$\therefore \qquad |\bar{R}| = \sqrt{x^2 + d^2}$$

$$\therefore \qquad \bar{a}_R = \frac{\bar{R}}{|\bar{R}|} = \frac{-x\bar{a}_x + d\bar{a}_z}{\sqrt{x^2 + d^2}}$$

$$\therefore \qquad d\bar{E} = \frac{\rho_L\, dx}{4\pi\varepsilon_0 \left(\sqrt{x^2 + d^2}\right)^2}\left[\frac{-x\bar{a}_x + d\bar{a}_z}{\sqrt{x^2 + d^2}}\right]$$

But as charge is along x axis, $\bar{E}$ at P can not have any component in the direction of $\bar{a}_x$. Hence $\bar{a}_x$ component need not be considered in integration.

The line charge ρ_L is to be located along y = 0, z = 0 line i.e. x axis.

For z = – 5 plane, the normal direction is $\bar{a}_{n1} = \bar{a}_z$ as the plane is parallel to xy plane. For y = – 5 plane, the normal direction is $\bar{a}_{n2} = \bar{a}_y$ as the plane is parallel to xz plane.

$$\therefore \qquad \bar{E}_1 = \frac{\rho_S}{2\varepsilon_0}\bar{a}_{n1} = \frac{\rho_S}{2\varepsilon_0}\bar{a}_z$$

and
$$\bar{E}_2 = \frac{\rho_S}{2\varepsilon_0}\bar{a}_{n2} = \frac{\rho_S}{2\varepsilon_0}\bar{a}_y$$

$$\therefore \qquad \bar{E} \text{ at P} = \bar{E}_1 + \bar{E}_2 = \frac{\rho_S}{2\varepsilon_0}\left[\bar{a}_y + \bar{a}_z\right] \text{ V/m} \qquad \text{... (1)}$$

Consider line charge along x axis. As it is infinite,

$$\bar{E} = \frac{\rho_L}{2\pi\varepsilon_0 r}\bar{a}_r = \frac{\rho_L}{2\pi\varepsilon_0 r}\left[\frac{\bar{r}}{|\bar{r}|}\right]$$

For $\bar{r}$, consider a point on the line charge (x, 0, 0) while P (4, 2, 2). But as line charge is along x axis, $\bar{E}$ will not have component in $\bar{a}_x$ direction so the x coordinate should not be considered while calculating $\bar{r}$.

$$\therefore \qquad \bar{r} = (2-0)\bar{a}_y + (2-0)\bar{a}_z = 2\bar{a}_y + 2\bar{a}_z$$

$$\therefore \qquad |\bar{r}| = \sqrt{(2)^2 + (2)^2} = \sqrt{8}$$

$$\therefore \qquad \bar{E} = \frac{\rho_L}{2\pi\varepsilon_0\left(\sqrt{8}\right)}\left[\frac{2\bar{a}_y + 2\bar{a}_z}{\sqrt{8}}\right]$$

$$= \frac{\rho_L}{8\pi\varepsilon_0}\left[\bar{a}_y + \bar{a}_z\right] \text{ V/m} \qquad \text{... (2)}$$

To have same $\bar{E}$ at P (4, 2, 2) equate (1) and (2)

$$\therefore \qquad \frac{\rho_S}{2\varepsilon_0} = \frac{\rho_L}{8\pi\varepsilon_0}$$

$$\therefore \qquad \rho_L = 4\pi \times \frac{10^{-9}}{6\pi} = 0.666 \text{ nC/m}$$

This is the required line charge density.

Ex. 2.22 *A line charge ρ_L = 50 nC/m is located along the line x = 2, y = 5 in free space.*
a) Find $\bar{E}$ at P (1, 3, – 4)
b) If the surface x = 4 contains a uniform surface charge density, $\rho_S = 18\,nC/m^2$, at what point in the z = 0 plane is total $\bar{E} = 0$?

While E_y and E_z are zero as $\bar{a}_r \cdot \bar{a}_y$ and $\bar{a}_r \cdot \bar{a}_z$ are zero for $\theta = 90°$ and $\phi = 0°$

$$\therefore \qquad \bar{E} = 0.1424\ \bar{a}_x \ \text{V/m}$$

Ex. 2.26 *Ten identical charges of 500 μC each are spaced equally around a circle of radius 2m. Find the force on a charge of −20 μC located on the axis, 2m from the plane of the circle.* **[V.T.U. March-99]**

Sol. : Consider the circle consisting of charges placed in xy plane and charge of −20μC is on z axis, 2m from the plane of the circle. This is shown in the Fig. 2.50.

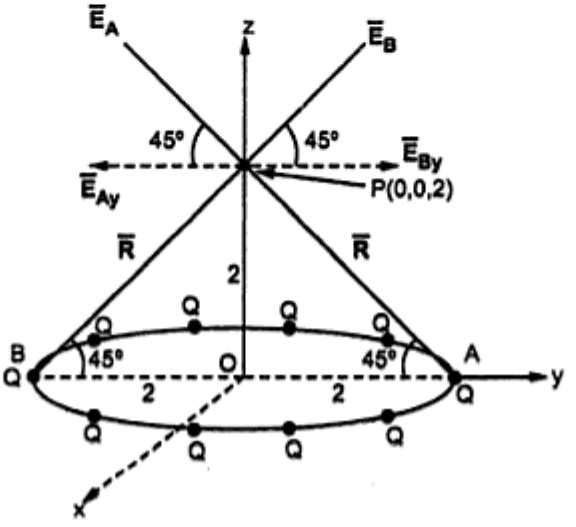

Fig. 2.50

The charges are placed equally i.e. at an interval of 360°/10 = 36° between each other. Five pairs of charges which are dimetrically opposite to each other, exists on the circumference of a circle. Consider a pair A and B. The field $\bar{E}_A$ due to Q at A, at point P is shown in the Fig. 2.50.

l (OQ) = 2m, l (OP) = 2m

$$\therefore \qquad \angle PAO = 45°$$

∴ y component of $\bar{E}_A$ i.e. $\bar{E}_{Ay} = \bar{E}_A \cos 45°$

Similarly l (OB) = 2m, l (OP) = 2m

$$\therefore \qquad \angle PBO = 45°$$

∴ y component of $\bar{E}_B$ i.e. $\bar{E}_{By} = \bar{E}_B \cos 45°$

But $\bar{E}_{Ay}$ is in $-\bar{a}_y$ direction while $\bar{E}_{By}$ is in $\bar{a}_y$ direction. From symmetry of the arrangement $|\bar{E}_{Ay}| = |\bar{E}_{By}|$. Hence they cancell each other.

While z components of $\overline{E}_A$ and $\overline{E}_B$ help each other as both are in $\overline{a}_z$ direction.

$$\overline{E}_{Az} = \overline{E}_{Bz} = \left(\overline{E}_A \text{ or } \overline{E}_B\right) \sin 45° \, \overline{a}_z$$

Similarly there are 4 more pairs of charges which will behave identically and their y components are going to cancell while z components are going to add.

Thus total z component of $\overline{E}$ at P is,

$$\overline{E}_{total} = (\overline{E} \text{ due to any charge}) \times 10 \times \sin 45° \overline{a}_z$$

$$= \frac{Q}{4\pi\varepsilon_0 R^2} \times 10 \times \sin 45° \overline{a}_z$$

where $$R = \sqrt{(2)^2 + (2)^2} = \sqrt{8}$$

$$\therefore \quad \overline{E}_{total} = \frac{500 \times 10^{-6}}{4\pi\varepsilon_0 \times \left(\sqrt{8}\right)^2} \times 10 \times \sin 45° \overline{a}_z$$

$$= 3.972 \times 10^6 \, \overline{a}_z \quad \text{V/m}$$

$$\therefore \quad \overline{F}_P = Q_P \, \overline{E}_{total} = -20 \times 10^{-6} \times 3.972 \times 10^6 \, \overline{a}_z$$

$$= -79.44 \, (\overline{a}_z) \text{ N}$$

This is the force on the charge at P. In general, force acts normal to the plane in which circle is kept, i.e. $-79.44 \, \overline{a}_n$ where $\overline{a}_n$ is unit vector normal to the plane containing the circle.

Ex. 2.27 *A metallic sphere of 1m diameter is immersed in oil of relative permittivity 2.5 and dielectric strength of 8×10^6 V/m. Calculate maximum amount of charge that can be held on the sphere.* **[P.U. May-98]**

Sol. : The dielectric strength means $|\overline{E}| = 8 \times 10^6$ V/m which indicates maximum $|\overline{E}|$ which can exist in the dielectric without breakdown. For any $|\overline{E}|$ more than this, the dielectric will breakdown.

Now $$|\overline{E}| = \frac{Q}{4\pi\varepsilon R^2} \quad \text{and} \quad \varepsilon_r = 2.5$$

where $$R = \frac{d}{2} = \frac{1}{2} = 0.5 \text{ m} \quad \text{and} \quad \varepsilon = \varepsilon_0 \varepsilon_r$$

$$\therefore \quad 8 \times 10^6 = \frac{Q}{4\pi \times 8.854 \times 10^{-12} \times 2.5 \times (0.5)^2}$$

$$\therefore \quad Q = 556.31 \, \mu\text{C}$$

The sphere can hold maximum of 556.31 μC without breakdown.

Ex. 2.28 *A 5 nC point charge is located at A (2, – 1, 3) in free space.*
a) Find $\overline{E}$ at origin.
b) Plot $|\overline{E}(x,0,0)|$ against x, $-10 \le x \le 10$ m.
c) What is $|\overline{E}(x,0,0)|_{max}$? **[P.U. Dec-90, Dec.-2003]**

Sol. : a) A (2, –1, 3) and P (0, 0, 0)

$$\therefore \quad \overline{E} \text{ at P} = \frac{Q}{4\pi\varepsilon_0 R_{AP}^2}\,\overline{a}_{AP}$$

Now
$$\overline{a}_{AP} = \frac{(0-2)\overline{a}_x + [0-(-1)]\overline{a}_y + [0-3]\overline{a}_z}{\sqrt{(-2)^2+(1)^2+(3)^2}}$$

$$\therefore \quad \overline{E} = \frac{5\times10^{-9}}{4\pi\times8.854\times10^{-12}\times\left(\sqrt{14}\right)^2}\left[\frac{-2\overline{a}_x+\overline{a}_y-3\overline{a}_z}{\sqrt{14}}\right]$$

$$= -1.715\,\overline{a}_x + 0.857\,\overline{a}_y - 2.573\,\overline{a}_z \quad \text{V/m}$$

b) Let point P is now (x, 0, 0).

$$\therefore \quad \overline{a}_{AP} = \frac{\overline{r}_{AP}}{|\overline{r}_{AP}|} = \frac{(x-2)\overline{a}_x+\overline{a}_y-3\overline{a}_z}{\sqrt{(x-2)^2+(1)^2+(-3)^2}}$$

$$\therefore \quad \overline{E} = \frac{Q}{4\pi\varepsilon_0\left[(x-2)^2+1+9\right]}\cdot\left[\frac{(x-2)\overline{a}_x+\overline{a}_y-3\overline{a}_z}{\sqrt{(x-2)^2+1+9}}\right]$$

$$= \frac{Q}{4\pi\varepsilon_0\left[(x-2)^2+10\right]^{3/2}}\left[(x-2)\overline{a}_x+\overline{a}_y-3\overline{a}_z\right]$$

$$= \frac{44.938}{\left[(x-2)^2+10\right]^{3/2}}\left[(x-2)\overline{a}_x+\overline{a}_y-3\overline{a}_z\right]$$

$$|\overline{E}| = \frac{44.938}{\left[(x-2)^2+10\right]^{3/2}}\left[\sqrt{(x-2)^2+(1)^2+(-3)^2}\right]$$

$$= \frac{44.938}{\left[(x-2)^2+10\right]} \quad \text{V/m}$$

To find x at which $|\overline{E}|$ is maximum,

$$\frac{d|\bar{E}|}{dx} = 0$$

$$\therefore \quad 44.938\left[\frac{-2(x-2)}{\left[(x-2)^2+10\right]^2}\right] = 0$$

$$\therefore \quad (x-2) = 0$$

$$\therefore \quad x = 2 \qquad \text{where } |\bar{E}| \text{ is maxium.}$$

The graph of $|\bar{E}|$ against x is shown in the Fig. 2.51.

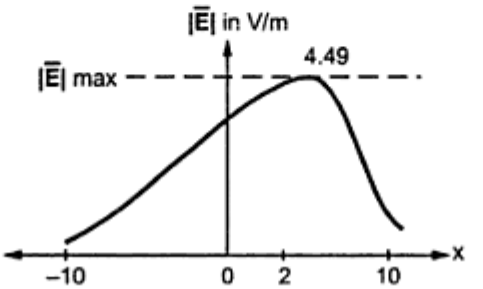

Fig. 2.51

c) Hence $|\bar{E}|_{max}$ is at x = 2,

$$\therefore \quad |\bar{E}|_{max} = \frac{44.938}{10} = 4.4938 \text{ V/m}$$

Important Results

☞	Coulomb's law
$F \propto \frac{Q_1 Q_2}{d^2}$	$F = \frac{k Q_1 Q_2}{d^2}$
$k = \frac{1}{4\pi\varepsilon_0}$ for free space or vacuum $\varepsilon_0 = 8.854 \times 10^{-12}$ F/m	
Vector form : $\bar{F}_2 = \frac{Q_1 Q_2}{4\pi\varepsilon_0 R_{12}^2}\bar{a}_{12} = \frac{Q_1 Q_2}{4\pi\varepsilon_0 R_{12}^2}\frac{\bar{R}_2-\bar{R}_1}{\lvert\bar{R}_2-\bar{R}_1\rvert}$ This is force exerted by Q_1 on Q_2.	
$\lvert\bar{F}_2\rvert = \lvert\bar{F}_1\rvert$ but $\bar{F}_2 = -\bar{F}_1$	
If there are n charges Q_1 to Q_n then the resultant force on the charge Q is, $\bar{F}_t = \sum_{i=1}^{n}\frac{Q_i Q}{4\pi\varepsilon_0 R_{iQ}^2}\bar{a}_{iQ}$	

23. *On the line $x = 4$ and $y = -4$, there is a uniform charge distribution with density $\rho_L = 25$ nC/m. Determine $\bar{E}$ at (–2, –1, 4) m.* **[Ans. : $-59.92\,\bar{a}_x + 29.96\,\bar{a}_y$ V/m]**
24. *The infinite line charge parallel to z axis is at $x = 6$, $y = 10$. Find $\bar{E}$ at the general point $P(x, y, z)$ in cartesian system.*

$$\text{[Ans. : } \frac{\rho_L}{2\pi\varepsilon_0\left[(x-6)^2+(y-10)^2\right]}\left[(x-6)\bar{a}_x+(y-10)\bar{a}_y\right] \text{ V/m]}$$

25. *Find $\bar{E}$ at (10, 0, 0) due to a charge of 10 nC which is distributed uniformly along x axis between $x = -5$ to $+5$m in free space.* **[Ans. : $1.8\,\bar{a}_x$ V/m]**
26. *A line charge density 24 nC/m is located in free space on the line $y = 1$, $z = 2$.*

    a) Find $\bar{E}$ at P (6, –1, 3).

    b) What point charge Q_A should be located at (–3, 4, 1) to cause y component of $\bar{E}$ to be zero at P ? **[Ans. : $-172.56\,\bar{a}_y + 86.28\,\bar{a}_z$ V/m, 4.43 μC]**
27. *Find $\bar{E}$ at P (0, 0, 2) m due to the infinite sheet of charge in xy plane with density $10\,nC/m^2$.* **[Ans. : $564.71\,\bar{a}_z$ V/m]**
28. *Two infinite sheets of charge each with density ρ_S are located at $x = \pm 2$ m. Determine $\bar{E}$ in all directions.* **[Ans. : For $x < -2$: $-\frac{\rho_S}{\varepsilon_0}\bar{a}_x$, For $-2 < x < 2$: 0, For $x > 2$: $\frac{\rho_S}{\varepsilon_0}\bar{a}_x$ in V/m]**
29. *Four infinite sheets of charges with uniform charge densities 20 pC/m², – 8 pC/m², 6 pC/m² and –18 pC/m² are located at $y = 6$, $y = 2$, $y = -2$ and $y = -5$ respectively. Find $\bar{E}$ at a) (2, 5, –6) b) (0, 0, 0) c) (– 1, – 2.1, 6) d) $(10^6, 10^6, 10^7)$.*

    [Ans. : $-2.26\,\bar{a}_y$ V/m, $-1.355\,\bar{a}_y$ V/m, $-2.03\,\bar{a}_y$ V/m, 0 V/m]
30. *A sheet of charge with $\rho_S = 2\,nC/m^2$ is in the plane $x = 2$ in free space and a line charge $\rho_L = 20$ nC/m is located at $x = 1$, $z = 4$.*

    a) Find $\bar{E}$ at P (0, 0, 0). b) $\bar{E}$ at (4, 5, 6).

    c) What is the force per unit length on the line charge ?

    [Ans. : $-134\,\bar{a}_x - 85\,\bar{a}_z$ V/m, $196\,\bar{a}_x + 55.31\,\bar{a}_z$ V/m, $-2.26\,\bar{a}_x$ μ N/m]

❑❑❑

3

Electric Flux Density and Gauss's Law

3.1 Introduction

Uptill now Coulomb's law and electric field intensity are discussed. The various possible charge distributions and corresponding electric field intensities are also discussed in the last chapter. Another important concept in electrostatics is electric flux. If a unit test charge is placed near a point charge, it experiences a force. The direction of this force can be represented by the lines, radially coming outward from a positive charge. These lines are called **streamlines** or **flux lines**. Thus the electric field due to a charge can be imagined to be present around it interms of a quantity called electric flux. The flux lines give the pictorial representation of distribution of electric flux around a charge. This chapter explains the concept of electric flux, electric flux density, Gauss's law, applications of Gauss's law and the divergence theorem.

3.2 Electric Flux

In 1837, **Michael Faraday** performed the experiment on electric field. He showed that the electric field around a charge can be imagined in terms of presence of the lines of force around it. He suggested that the electric field should be assumed to be coomposed of very small bunches containing a fixed number of electric lines of force. Such a bunch or closed area is called a **tube of flux**. The total number of tubes of flux in any particular electric field is called as the **electric flux**.

Key Point : *Thus the total number of lines of force in any particular electric field is called the electric flux. It is represented by the symbol ψ. Similar to the charge, unit of electric flux is also coulomb C.*

3.2.1 Properties of Flux Lines

The electric flux is nothing but the lines of force, around a charge. Such electric flux lines have following properties,

1. The flux lines start from positive charge and terminate on the negative charge as shown in the Fig. 3.1.

2. If the negative charge is absent, then the flux lines terminate at infinity as shown in the Fig. 3.2. (a). While in absence of positive charge, the electric flux terminates on the negative charge from infinity. This is shown in the Fig. 3.2 (b).

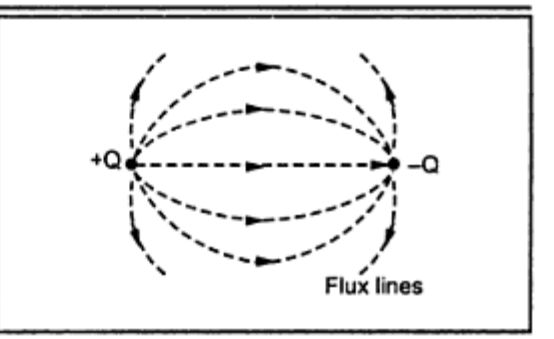

Fig. 3.1 Flux lines

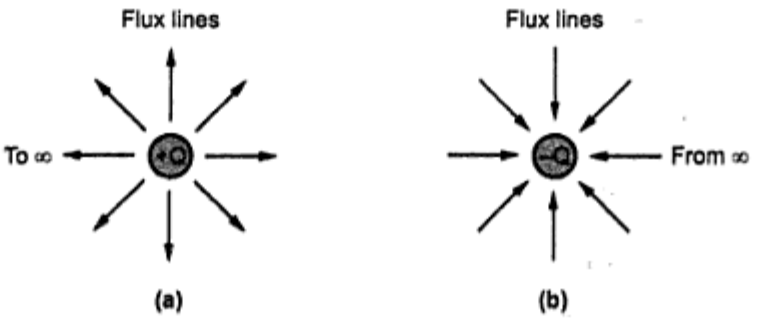

Fig. 3.2

3. There are more number of lines i.e. crowding of lines if electric field is stronger.

4. These lines are parallel and never cross each other.

5. The lines are independent of the medium in which charges are placed.

6. The lines always enter or leave the charged surface, normally.

7. If the charge on a body is ± Q coulombs, then the total number of lines originating or terminating on it is also Q. But the total number of lines is nothing but a flux.

$$\therefore \quad \boxed{\text{Electric flux } \psi = Q \text{ coulombs (numerically)}}$$

This is according to SI units. Hence if Q is large then flux ψ is more surrounding the charge and viceversa.

The electric flux is also called **displacement flux**.

The flux is a scalar field. Let us define now a vector field associated with the flux called electric flux density.

3.3 Electric Flux Density ($\overline{D}$)

Consider the two point charges as shown in the Fig. 3.3. The flux lines originating from positive charge and terminating at negative charge are shown in the form of tubes.

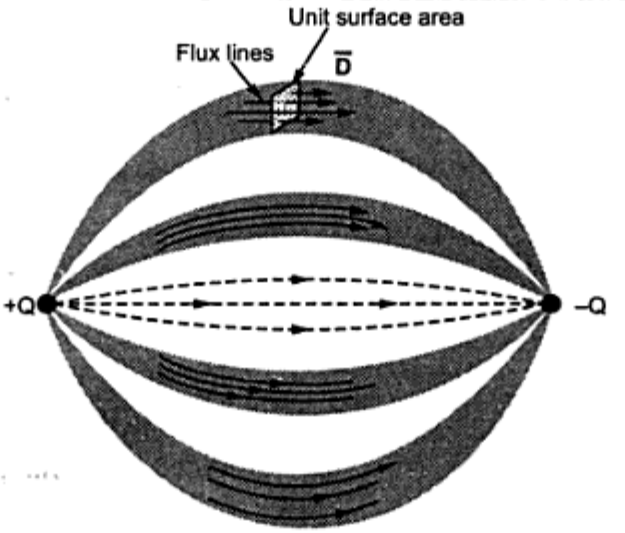

Fig. 3.3 Concept of electric flux density

Consider a unit surface area as shown in the Fig. 3.3. The number of flux lines are passing through this surface area.

The net flux passing normal through the unit surface area is called the **electric flux density**. It is denoted as $\overline{D}$. It has a specific direction which is normal to the surface area under consideration hence it is a vector field.

Consider a sphere with a charge Q placed at its centre. There are no other charges present around. The total flux distributes radially around the charge is $\psi = Q$. This flux distributes uniformly over the surface of the sphere.

Now, ψ = total flux

While, S = total surface area of sphere

then electric flux density is defined as,

$$\boxed{D = \frac{\psi}{S} \text{ in magnitude}} \quad \text{... (1)}$$

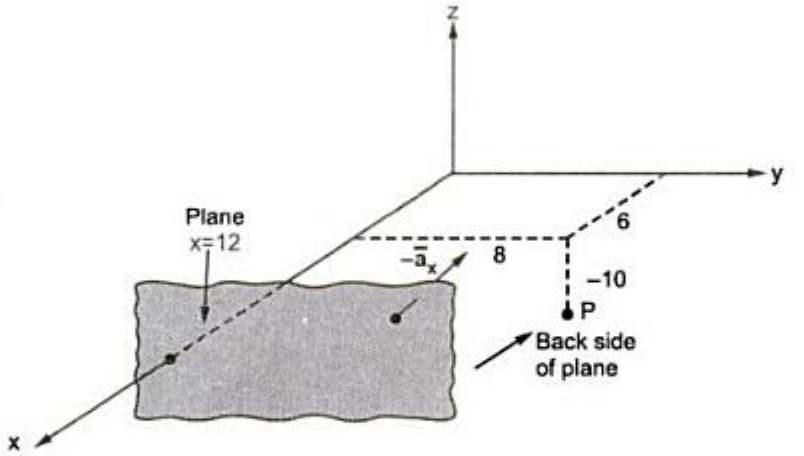

Fig. 3.7

Ex. 3.2 *A point charge of 6 μC is located at the origin, a uniform line charge density of 180 nC/m lies along x-axis and uniform sheet of charge equal to 25 nC/m² lies in the z = 0 plane. Find i) $\overline{D}$ at A (0, 0, 4), ii) $\overline{D}$ at B (1, 2, 4) and iii) Total electric flux leaving the surface of the sphere of 4 m radius centered at the origin.*

[M.U. May-98, May-2000, P.U. Dec-89]

Sol. : **i) Case 1 : Point charge** Q = 6 μC at P (0, 0, 0).

While $\overline{D}$ to be obtained at A (0, 0, 4).

$$\therefore \quad \bar{r} = (4-0)\bar{a}_z = 4\bar{a}_z, \ |\bar{r}| = \sqrt{(4)^2} = 4, \ \bar{a}_r = \frac{\bar{r}}{|\bar{r}|} = \bar{a}_z$$

$$\therefore \quad \overline{D}_1 = \frac{Q}{4\pi r^2}\bar{a}_r = \frac{6\times10^{-6}}{4\pi\times(4)^2}\bar{a}_z = 2.984\times10^{-8}\,\bar{a}_z \ \text{C/m}^2$$

Case 2 : Line Charge ρ_L = 180 nC/m along x-axis. So any point P on the charge is (x, 0, 0), while A (0, 0, 4). As charge is along x-axis, no component of $\overline{D}$ is along x-axis. So do not consider x co-ordinate while obtaining $\bar{r}$.

$$\therefore \quad \bar{r} = (4-0)\bar{a}_z = 4\bar{a}_z, \ |\bar{r}| = 4, \ \bar{a}_r = \frac{\bar{r}}{|\bar{r}|} = \bar{a}_z$$

As charge is infinite,

$$\therefore \quad \overline{D}_2 = \frac{\rho_L}{2\pi r}\bar{a}_r = \frac{180\times10^{-9}}{2\pi\times4}\bar{a}_z = 7.161\times10^{-9}\,\bar{a}_z \ \text{C/m}^2$$

Case 3 : Uniform sheet of charge lies in z = 0 plane. So the direction normal to it is z direction as plane is xy plane. Hence $\bar{a}_n = \bar{a}_z$ and ρ_S = 25 nC/m².

As sheet is infinite,

$$\overline{D}_3 = \frac{\rho_S}{2}\overline{a}_n = \frac{25\times10^{-9}}{2}\overline{a}_z = 12.5\times10^{-9}\,\overline{a}_z \text{ C/m}^2$$

$$\therefore \quad \overline{D} = \overline{D}_1 + \overline{D}_2 + \overline{D}_3 = 49.501\times10^{-9}\,\overline{a}_z \text{ C/m}^2$$

ii) The point at which $\overline{D}$ is to be obtained is now B (1, 2, 4).

Case 1 : Point charge Q = 6 μC at P (0, 0, 0).

$$\therefore \quad \overline{r} = (1-0)\overline{a}_x + (2-0)\,\overline{a}_y + (4-0)\,\overline{a}_z = \overline{a}_x + 2\overline{a}_y + 4\overline{a}_z$$

$$\therefore \quad |\overline{r}| = \sqrt{(1)^2 + (2)^2 + (4)^2} = \sqrt{21}$$

$$\therefore \quad \overline{a}_r = \frac{\overline{r}}{|\overline{r}|} = \frac{\overline{a}_x + 2\overline{a}_y + 4\overline{a}_z}{\sqrt{21}}$$

$$\therefore \quad \overline{D}_1 = \frac{Q}{4\pi r^2}\overline{a}_r = \frac{6\times10^{-6}}{4\pi\times(\sqrt{21})^2}\left[\frac{\overline{a}_x + 2\overline{a}_y + 4\overline{a}_z}{\sqrt{21}}\right]$$

$$= 4.961\times10^{-9}\,\overline{a}_x + 9.923\times10^{-9}\,\overline{a}_y + 1.9845\times10^{-8}\,\overline{a}_z \text{ C/m}^2$$

Case 2 : Line charge : The point on the charge is (x, 0, 0).

As charge is along x-axis, do not consider x co-ordinate.

$$\therefore \quad \overline{r} = (2-0)\overline{a}_y + (4-0)\,\overline{a}_z = 2\overline{a}_y + 4\overline{a}_z \qquad \text{... as B (1, 2, 4)}$$

$$\therefore \quad |\overline{r}| = \sqrt{(2)^2 + (4)^2} = \sqrt{20}$$

$$\therefore \quad \overline{a}_r = \frac{\overline{r}}{|\overline{r}|} = \frac{2\overline{a}_y + 4\overline{a}_z}{\sqrt{20}}$$

$$\therefore \quad \overline{D}_2 = \frac{\rho_L}{2\pi r}\overline{a}_r = \frac{180\times10^{-9}}{2\pi\times\sqrt{20}}\left[\frac{2\overline{a}_y + 4\overline{a}_z}{\sqrt{20}}\right]$$

$$= 2.8647\times10^{-9}\,\overline{a}_y + 5.7295\times10^{-9}\,\overline{a}_z \text{ C/m}^2$$

Case 3 : Infinite sheet of charge in z = 0 plane.

The point B (1, 2, 4) is above z = 0 plane hence $\overline{a}_n = \overline{a}_z$ and $\overline{D}_3$ remains same as before.

$$\overline{D}_3 = \frac{\rho_S}{2}\overline{a}_n = \frac{25\times10^{-9}}{2}\overline{a}_z = 12.5\times10^{-9}\,\overline{a}_z \text{ C/m}^2$$

$$\therefore \quad \overline{D} = \overline{D}_1 + \overline{D}_2 + \overline{D}_3$$

Consider a rectangular box as a Gaussian surface which is cut by the sheet of charge to give dS = dx dy.

$\overline{D}$ acts normal to the plane i.e. $\bar{a}_n = \bar{a}_z$ and $-\bar{a}_n = -\bar{a}_z$ direction.

Hence $\overline{D} = 0$ in x and y directions.

Hence the charge enclosed can be written as,

$$Q = \oint_S \overline{D} \cdot d\overline{S} = \oint_{sides} \overline{D} \cdot d\overline{S} + \oint_{top} \overline{D} \cdot d\overline{S} + \oint_{bottom} \overline{D} \cdot d\overline{S}$$

But $\oint_{sides} \overline{D} \cdot d\overline{S} = 0$ as $\overline{D}$ has no component in x and y directions

Now $\overline{D} = D_z \bar{a}_z$ for top surface

and $d\overline{S} = dx\, dy\, \bar{a}_z$

$\therefore$ $\overline{D} \cdot d\overline{S} = D_z\, dx\, dy\, (\bar{a}_z \cdot \bar{a}_z) = D_z\, dx\, dy$

and $\overline{D} = D_z(-\bar{a}_z)$ for bottom surface.

and $d\overline{S} = dx\, dy\, (-\bar{a}_z)$

$\therefore$ $\overline{D} \cdot d\overline{S} = D_z\, dx\, dy\, (\bar{a}_z \cdot \bar{a}_z) = D_z\, dx\, dy$

$\therefore$ $Q = \oint_{top} D_z\, dx\, dy + \oint_{bottom} D_z\, dx\, dy$

Now $\oint_{top} dx\, dy = \oint_{bottom} dx\, dy = A =$ Area of surface

$\therefore$ $Q = 2 D_z A$

But $Q = \rho_S \times A$ as ρ_S = Surface charge density

$\therefore$ $\rho_S = 2D_z$

$\therefore$ $D_z = \dfrac{\rho_S}{2}$

$\therefore$ $\overline{D} = D_z \bar{a}_z = \dfrac{\rho_S}{2} \bar{a}_z$ C/m² ... (11)

$\therefore$ $\overline{E} = \dfrac{\overline{D}}{\varepsilon_0} = \dfrac{\rho_S}{2\varepsilon_0} \bar{a}_z$ V/m ... (12)

The results are same as obtained by the Coulomb's law for the infinite sheet of charge.

3.8.5 Spherical Shell of Charge

Consider an imaginary spherical shell of radius 'a'.

The charge is uniformly distributed over its surface with a density ρ_S C/m^2. Let us find $\overline{E}$ at a point P located at a distance r from the centre such that r > a and r ≤ a, using Gauss's law.

The shell is shown in the Fig. 3.14.

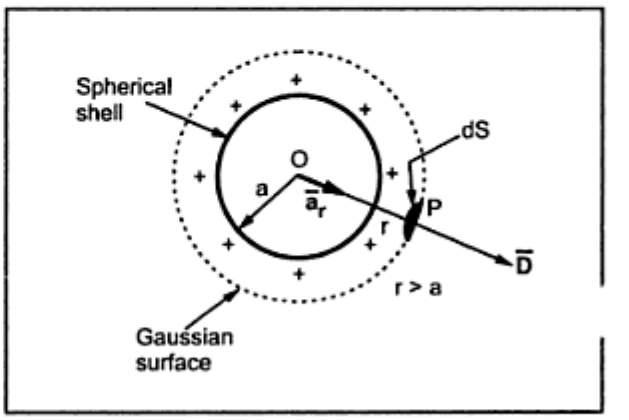

Fig. 3.14 Spherical shell of charge

Case 1 : Point P outside the shell. (r > a)

Consider a point P at a distance r from the origin such that r > a. The Gaussian surface passing through point P is a concentric sphere of radius r. Due to spherical Gaussian surface, the flux lines are directed radially outwards and are normal to the surface. Hence electric flux density $\overline{D}$ is also directed radially outwards at point P and has component only in $\overline{a}_r$ direction. Consider a differential surface area at P normal to $\overline{a}_r$ direction hence $dS = r^2 \sin\theta \, d\theta \, d\phi$ in spherical system.

$$\therefore \quad d\psi = \overline{D} \cdot d\overline{S} = [D_r \overline{a}_r] \cdot \left[r^2 \sin\theta \, d\theta \, d\phi \, \overline{a}_r\right]$$

$$= D_r \, r^2 \sin\theta \, d\theta \, d\phi$$

$$\therefore \quad \psi = \oint_S D_r \, r^2 \sin\theta \, d\theta \, d\phi = D_r \, r^2 \int_{\phi=0}^{2\pi} \int_{\theta=0}^{\pi} \sin\theta \, d\theta \, d\phi$$

$$\therefore \quad \psi = D_r \, r^2 \left[-\cos\theta\right]_0^{\pi} \left[\phi\right]_0^{2\pi} = 4\pi r^2 D_r \qquad \text{... (13)}$$

But $\quad \psi = Q \qquad$ ... Gauss's law

$$\therefore \quad Q = 4\pi r^2 D_r$$

$$\therefore \quad D_r = \frac{Q}{4\pi r^2}$$

$$\therefore \quad \overline{D} = D_r \, \overline{a}_r = \frac{Q}{4\pi r^2} \overline{a}_r \ \text{C/m}^2 \qquad \text{... (14)}$$

And $$\overline{E} = \frac{\overline{D}}{\varepsilon_0} = \frac{Q}{4\pi\varepsilon_0 r^2} \overline{a}_r \ \text{V/m} \qquad \text{... (15)}$$

Thus for r > a, the field $\overline{E}$ is inversely proportional to the square of the distance from the origin.

If the surface charge density is ρ_S C/m² then

$$Q = \rho_S \times \text{Surface area of shell}$$

$$\therefore \quad Q = \rho_S \times 4\pi a^2$$

$$\therefore \quad \overline{E} = \frac{\rho_S 4\pi a^2}{4\pi\varepsilon_0 r^2}\overline{a}_r = \frac{\rho_S a^2}{\varepsilon_0 r^2}\overline{a}_r \text{ V/m} \quad \text{... (16)}$$

and

$$\boxed{\overline{D} = \varepsilon_0 \overline{E} = \frac{\rho_S a^2}{r^2}\overline{a}_r} \text{ C/m}^2 \quad \text{... (17)}$$

Case 2 : Point P is on the shell (r = a)

On the shell, $r = a$

The Gaussian surface is same as the shell itself and $\overline{E}$ can be obtained using r = a in the equation (15).

$$\therefore \quad \overline{E} = \frac{Q}{4\pi\varepsilon_0 a^2}\overline{a}_r \text{ V/m} \quad \text{... (18)}$$

Case 3 : Point P inside the shell (r < a)

The Gaussian surface, passing through the point P is again a spherical surface with radius r < a.

But it can be seen that the entire charge is on the surface and no charge is enclosed by the spherical shell. And when the Gaussian surface is such that no charge is enclosed, irrespective of any charges present outside, the total charge enclosed is zero.

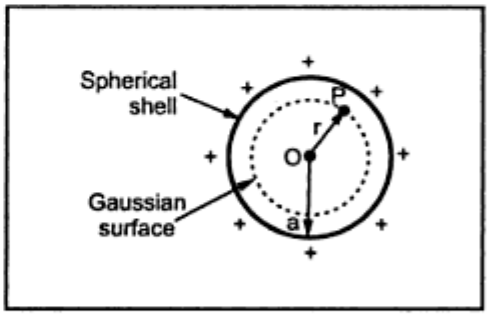

Fig. 3.15

$$\therefore \quad \psi = Q = \oint_S \overline{D} \cdot d\overline{S} = 0 \quad \text{.... As per Gauss's law}$$

Now $$\oint_S d\overline{S} = \int_{\phi=0}^{2\pi}\int_{\theta=0}^{\pi} r^2 \sin\theta \, d\theta \, d\phi = 4\pi r^2$$

Thus $$\oint_S d\overline{S} \neq 0$$

Hence to satisfy that total charge enclosed is zero, inside the spherical shell.

$$\boxed{\overline{D} = 0 \qquad \text{and} \qquad \overline{E} = \frac{\overline{D}}{\varepsilon_0} = 0} \qquad \text{... (19)}$$

Thus electric flux density and electric field at any point **inside a spherical shell is zero.**

3.8.5.1 Variation of $\overline{E}$ Against r

The variation of $\overline{E}$ against the radial distance r measured from the origin is shown in the Fig. 3.16.

For $r < a$, $\overline{E} = 0$

For $r = a$, $\overline{E} = \dfrac{Q}{4\pi\varepsilon_0 a^2}\,\overline{a}_r$

For $r > a$, $\overline{E} = \dfrac{Q}{4\pi\varepsilon_0 r^2}\,\overline{a}_r$

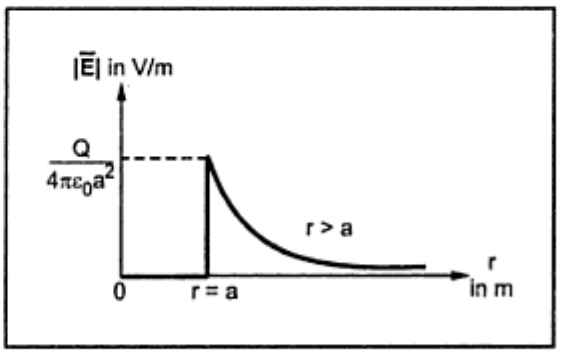

Fig. 3.16 Variation of $|\overline{E}|$ against r

After $r = a$, the $\overline{E}$ is inversely proportional to the square of the radial distance of a point from the origin. **The variation of $|\overline{D}|$ against r is also similar.** For the medium other than the free space, ε_0 must be replaced by $\varepsilon = \varepsilon_0 \varepsilon_r$.

3.8.6 Uniformly Charged Sphere

Consider a sphere of radius 'a' with a uniform charge density of ρ_v C/m^3. Let us find $\overline{E}$ at a point P located at a radial distance r from centre of the sphere such that $r \le a$ and $r > a$, using Gauss's law.

The sphere is shown in the Fig. 3.17.

Case 1 : The point P is outside the sphere ($r > a$).

The Gaussian surface passing through point P is a spherical surface of radius r.

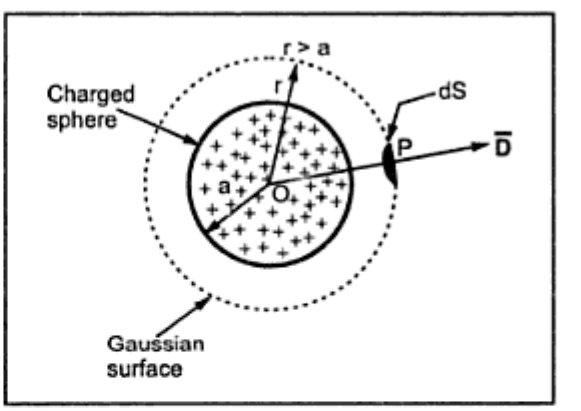

Fig. 3.17 Uniformly charged sphere

The flux lines and $\overline{D}$ are directed radially outwords along $\overline{a}_r$ direction.

The differential area dS is considered at point P which is normal to $\overline{a}_r$ direction.

$$\therefore \qquad dS = r^2 \sin\theta \, d\theta \, d\phi$$

$$\therefore \quad d\psi = \overline{D} \cdot d\overline{S} = D_r \overline{a}_r \cdot r^2 \sin\theta \, d\theta \, d\phi \, \overline{a}_r$$

$$= D_r r^2 \sin\theta \, d\theta \, d\phi \qquad \ldots (\overline{a}_r \cdot \overline{a}_r = 1)$$

$$\therefore \quad \psi = Q = \oint_S \overline{D} \cdot d\overline{S} = \int_{\phi=0}^{2\pi} \int_{\theta=0}^{\pi} D_r r^2 \sin\theta \, d\theta \, d\phi$$

$$= D_r r^2 \left[-\cos\theta\right]_0^{\pi} \left[\phi\right]_0^{2\pi} = D_r r^2 4\pi$$

$$\therefore \quad D_r = \frac{Q}{4\pi r^2}$$

$$\therefore \quad \overline{D} = \frac{Q}{4\pi r^2} \overline{a}_r \ \ C/m^2 \qquad \ldots (20)$$

$$\therefore \quad \overline{E} = \frac{\overline{D}}{\varepsilon_0} = \frac{Q}{4\pi\varepsilon_0 r^2} \overline{a}_r \ \ V/m \qquad \ldots (21)$$

The total charge enclosed can be obtained as,

$$Q = \int_v \rho_v \, dv = \int_{\phi=0}^{2\pi} \int_{\theta=0}^{\pi} \int_{r=0}^{a} \rho_v r^2 \sin\theta \, dr \, d\theta \, d\phi$$

$$= \rho_v \left[\frac{r^3}{3}\right]_0^a \left[-\cos\theta\right]_0^{\pi} \left[\phi\right]_0^{2\pi}$$

$$= \frac{4}{3}\pi a^3 \rho_v \ C \qquad \ldots (22)$$

$$\therefore \quad \overline{E} = \frac{\frac{4}{3}\pi a^3 \rho_v}{4\pi\varepsilon_0 r^2} \overline{a}_r = \frac{a^3 \rho_v}{3\varepsilon_0 r^2} \overline{a}_r \qquad \ldots (23)$$

While $$\boxed{\overline{D} = \frac{a^3 \rho_v}{3r^2} \overline{a}_r} \qquad \ldots (24)$$

These are the expressions for $\overline{D}$ and $\overline{E}$ outside the uniformly charged sphere.

Case 2 : The point P on the sphere (r = a).

The Gaussian surface is same as the surface of the charged sphere. Hence results can be obtained directly substituting r = a in the equation (23) and (21).

$$\therefore \quad \overline{E} = \frac{a^3 \rho_v}{3\varepsilon_0 a^2} \overline{a}_r = \frac{\rho_v a}{3\varepsilon_0} \overline{a}_r \qquad \ldots (25)$$

and $$\boxed{\overline{D} = \varepsilon_0 \overline{E} = \frac{\rho_v a}{3} \overline{a}_r} \quad \text{... (26)}$$

Case 3 : The piont P is inside the sphere (r < a) the Gaussian surface is a spherical surface of radius r where r < a.

Consider differential surface area dS as shown in the Fig. 3.18.

Again $d\overline{S}$ and $\overline{D}$ are directed radially outwards.

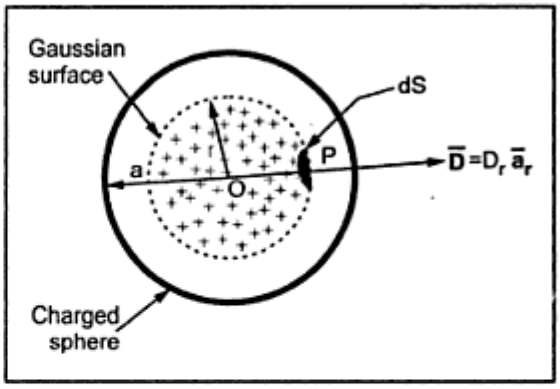

Fig. 3.18

$$\therefore \quad \overline{D} = D_r \overline{a}_r \quad \text{while} \quad d\overline{S} = r^2 \sin\theta \, d\theta \, d\phi \, \overline{a}_r$$

$$\therefore \quad d\psi = \overline{D} \cdot d\overline{S} = D_r r^2 \sin\theta \, d\theta \, d\phi \qquad \text{... } (\overline{a}_r \cdot \overline{a}_r = 1)$$

$$\therefore \quad \psi = Q = \oint_S \overline{D} \cdot d\overline{S} = \int_{\phi=0}^{2\pi} \int_{\theta=0}^{\pi} D_r r^2 \sin\theta \, d\theta \, d\phi$$

$$= D_r r^2 \left[-\cos\theta\right]_0^{\pi} \left[\phi\right]_0^{2\pi} = 4\pi r^2 D_r$$

$$\therefore \quad D_r = \frac{Q}{4\pi r^2}$$

$$\therefore \quad \overline{D} = \frac{Q}{4\pi r^2} \overline{a}_r \ C/m^2 \qquad \text{... (27)}$$

Now the charge enclosed is by the sphere of radius r only and not by the entire sphere. **The charge outside the Gaussian surface will not affect $\overline{D}$.**

$$\therefore \quad Q = \int_v \rho_v \, dv = \int_{\phi=0}^{2\pi} \int_{\theta=0}^{\pi} \int_{r=0}^{r} r^2 \sin\theta \, dr \, d\theta \, d\phi$$

$$= \frac{4}{3}\pi r^3 \rho_v \qquad \text{where } r < a \qquad \text{... (28)}$$

Using in (27) we get,

$$\overline{D} = \frac{\frac{4}{3}\pi r^3 \rho_v}{4\pi r^2} \overline{a}_r$$

$$\therefore \quad \boxed{\overline{D} = \frac{r}{3}\rho_v \overline{a}_r \qquad \text{.....} 0 < r \le a} \qquad \text{... (29)}$$

$$\therefore \qquad \overline{E} = \frac{\overline{D}}{\varepsilon_0} = \frac{r}{3\varepsilon_0}\rho_v \, \overline{a}_r \qquad 0 < r \le a \qquad \text{... (30)}$$

Key Point: *The results obtained here can be used as the standard results while solving the problems.*

If the sphere is in a medium of permittivity ε_r then ε_0 must be replaced by $\varepsilon = \varepsilon_0 \varepsilon_r$.

3.8.6.1 Variation of $\overline{E}$ Against r

From the equations (21), (23) and (28) it can seen that for r > a, the $\overline{E}$ is inversely proportional to square of the distance while for r < a it is directly proportional to the distance r. At r = a, $|\overline{E}| = \frac{\rho_v a}{3\varepsilon_0}$ depends on the radius of the charged sphere.

For r > a, the graph of $|\overline{E}|$ against r is parabolic while for r < a it is a straight line as shown in the Fig. 3.19.

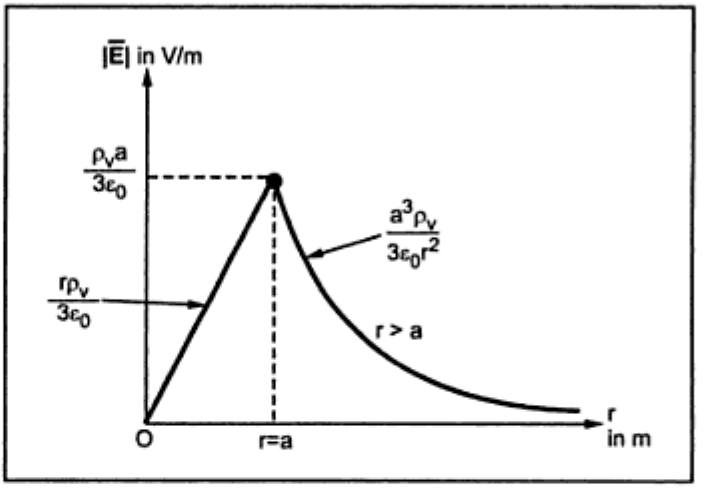

Fig. 3.19 Variation of $|\overline{E}|$ against r

The graph of $|\overline{D}|$ against r is exactly similar in nature as $|\overline{E}|$ against r.

3.9 Gauss's Law Applied to Differential Volume Element

Uptill now we have considered the various cases in which there exists a symmetry and component of $\overline{D}$ is normal to the surface and constant everywhere on the surface. But if there does not exist a symmetry and Gaussian surface can not be chosen such that normal component of $\overline{D}$ is constant or zero everywhere on the surface, Gauss's law can not be directly applied.

In such a case a differential closed Gaussian surface is considered. The closed surface is so small that $\overline{D}$ is almost constant everywhere on the surface. Finally results can be obtained by decreasing the volume enclosed by Gaussian surface to approach to zero.

Consider a cartesian co-ordinate system and a point P in it such that the electric flux density at P is given by,

$$\overline{D} = D_x \, \overline{a}_x + D_y \, \overline{a}_y + D_z \, \overline{a}_z \qquad \text{... (1)}$$

Consider the closed Gaussian differential surface in the form of rectangular box, which is a differential volume element. The sides of this element are $\Delta x, \Delta y$, and Δz. The position of this element is such that the point P is at the centre of the element and treated to be origin. Hence $\overline{D}$ at P can be denoted as $\overline{D}_0$. This is shown in the Fig. 3.20.

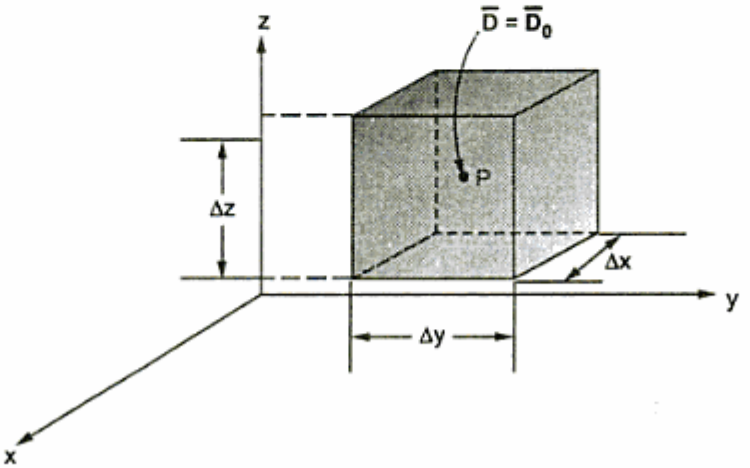

Fig. 3.20 Differential volume element

Let $\overline{D} = \overline{D}_0 = D_{x0}\,\overline{a}_x + D_{y0}\,\overline{a}_y + D_{z0}\,\overline{a}_z$ at point P

The components D_{x0}, D_{y0} and D_{z0} vary with distance in the respective directions.

According to Gauss's law,

$$Q = \oint_S \overline{D} \cdot d\overline{S} \qquad \text{... (2)}$$

The total surface integral is to be evaluated over six surfaces front, back, leftside, rightside, top and bottom.

$$\therefore \quad \oint_S \overline{D} \cdot d\overline{S} = \left\{ \int_{\text{front}} + \int_{\text{back}} + \int_{\text{leftside}} + \int_{\text{rightside}} + \int_{\text{top}} + \int_{\text{bottom}} \right\} \overline{D} \cdot d\overline{S} \qquad \text{... (3)}$$

Consider the front surface of the differential element. Though $\overline{D}$ is varying with distance, for small surface like front surface it can be assumed constant.

And $d\overline{S} = \Delta y \Delta z\, \overline{a}_x$ ... as $\overline{a}_x$ is normal to front

while $\overline{D} = \overline{D}_{\text{front}}$ constant

$$\therefore \quad \int_{\text{front}} \overline{D} \cdot d\overline{S} \approx \overline{D}_{\text{front}} \cdot (\Delta y \Delta z)\, \overline{a}_x \qquad \text{... (4)}$$

But $\overline{D}_{\text{front}} = D_{x,\,\text{front}}\, \overline{a}_x$ ... (5)

$$\therefore \quad \int_{front} \overline{D} \cdot d\overline{S} \approx D_{front} \Delta y \Delta z \qquad \text{as } \overline{a}_x \cdot \overline{a}_x = 1 \qquad \text{... (6)}$$

It has been mentioned that $D_{x,\,front}$ is changing in x direction. At P, it is D_{x0} while on the front surface it will change and given by,

$$D_{x,\,front} = D_{x0} + \begin{bmatrix} \text{Rate of change} \\ \text{of } D_x \text{ with x} \end{bmatrix} \times \begin{bmatrix} \text{Distance of surface} \\ \text{from P} \end{bmatrix}$$

$$D_{x,\,front} = D_{x0} + \frac{\partial D_x}{\partial x} \frac{\Delta x}{2} \qquad \text{... (7)}$$

- The point P is at the centre so distance of surface in x direction from P is $\frac{\Delta x}{2}$.
- The rate of change is expressed as **partial derivative** as Dx varies with y and z co-ordinates also.

$$\therefore \quad \int_{front} \overline{D} \cdot d\overline{S} \approx \left[D_{x0} + \frac{\Delta x}{2} \frac{\partial D_x}{\partial x} \right] \Delta y \Delta z \qquad \text{... (8)}$$

Consider the integral over the back surface,

$$\therefore \quad \int_{back} \overline{D} \cdot d\overline{S} \approx \overline{D}_{back} \cdot d\overline{S}$$

where $\quad \overline{D}_{back} = D_{x,\,back} (\overline{a}_x)$

$$\therefore \quad d\overline{S} = \Delta y \Delta z (-\overline{a}_x)$$

Key Point: *Note that the flux is entering from back side and leaving from front in positive x direction hence $\overline{a}_x$ is used positive for $\overline{D}_{back}$. While the surface considered from point P is in negative x direction hence $-\overline{a}_x$ is used for expressing $d\overline{S}$.*

$$\therefore \quad \overline{D}_{back} \cdot d\overline{S} = -D_{x,\,back} \Delta y \Delta z \qquad \text{... } (\overline{a}_x \cdot \overline{a}_x = 1)$$

$$\therefore \quad \int_{back} \overline{D} \cdot d\overline{S} \approx D_{x,\,back} \Delta y \Delta z \qquad \text{... (9)}$$

Now $D_{x,\,back}$ is changing with x. At P it is D_{x0} while on the back side it will be different and can be obtained as,

$$\therefore \quad D_{x,\,back} = D_{x0} - \begin{bmatrix} \text{Rate of change} \\ \text{of } D_x \text{ with x} \end{bmatrix} \times \begin{bmatrix} \text{Distance of surface} \\ \text{from P} \end{bmatrix}$$

$$\therefore \quad D_{x,\,back} = D_{x0} - \frac{\Delta x}{2} \frac{\partial D_x}{\partial x} \qquad \text{... (10)}$$

The negative sign is used as the surface is in negative direction of x from P.

Substituting in (9) we get,

$$\int_{back} \overline{D} \cdot d\overline{S} = -\left[D_{x0} - \frac{\Delta x}{2}\frac{\partial D_x}{\partial x}\right] \Delta y \Delta z$$

$$\therefore \quad \int_{back} \overline{D} \cdot d\overline{S} = \left[-D_{x0} + \frac{\Delta x}{2}\frac{\partial D_x}{\partial x}\right] \Delta y \Delta z \quad \text{... (11)}$$

Combining (8) and (11),

$$\int_{front} + \int_{back} = 2 \times \frac{\Delta x}{2}\frac{\partial D_x}{\partial x} \Delta y \Delta z$$

$$\int_{front} + \int_{back} = \frac{\partial D_x}{\partial x} \Delta x \Delta y \Delta z \quad \text{... (12)}$$

Similarly we can write,

$$\int_{left} + \int_{right} = \frac{\partial D_y}{\partial y} \Delta x \Delta y \Delta z \quad \text{... (13)}$$

$$\int_{top} + \int_{bottom} = \frac{\partial D_z}{\partial z} \Delta x \Delta y \Delta z \quad \text{... (14)}$$

$$\therefore \quad \oint_S \overline{D} \cdot d\overline{S} = \left(\frac{\partial D_x}{\partial x} + \frac{\partial D_y}{\partial y} + \frac{\partial D_z}{\partial z}\right) \Delta x \Delta y \Delta z$$

But $\quad \Delta x \Delta y \Delta z$ = Differential volume Δv

$$\therefore \quad \oint_S \overline{D} \cdot d\overline{S} = Q = \left(\frac{\partial D_x}{\partial x} + \frac{\partial D_y}{\partial y} + \frac{\partial D_z}{\partial z}\right) \Delta v \quad \text{... (15)}$$

Thus the charge enclosed in volume Δv is given by,

$$\boxed{Q = \text{Charge enclosed in volume } \Delta v = \left(\frac{\partial D_x}{\partial x} + \frac{\partial D_y}{\partial y} + \frac{\partial D_z}{\partial z}\right) \Delta v}$$

... (16)

This result leads to the concept of divergence.

Ex. 3.3 *The flux density* $\overline{D} = \frac{r}{3}\overline{a}_r$ *nC/m²* *is in the free space :*

a) Find $\overline{E}$ *at* $r = 0.2$ *m.*

b) Find the total electric flux leaving the sphere of $r = 0.2$ *m.*

c) Find the total charge within the sphere of $r = 0.3$ *m.* **[P.U. Dec-92]**

$$\therefore \; -2.2619\times10^{-6}\,L = D_{2r}\times r\times 2\pi L$$

$$\therefore \quad D_{2r} = \frac{-2.2619\times10^{-6}}{2\pi r} = \frac{-0.36}{r}\times10^{-6}$$

$$\therefore \quad \overline{D}_2 = \frac{-0.36}{r}\,\overline{a}_r\ \mu C/m^2 \qquad \text{for } r > 3$$

$$\therefore \quad \overline{D} = \overline{D}_1 + \overline{D}_2 = \frac{0.0378}{r}\,\overline{a}_r\ \mu C/m^2 \qquad \text{for } r > 3$$

3.10 Divergence

Applying Gauss's law to the differential volume element, we have obtained the relation,

$$Q = \left(\frac{\partial D_x}{\partial x} + \frac{\partial D_y}{\partial y} + \frac{\partial D_z}{\partial z}\right)\Delta v \qquad \text{... (1)}$$

This is the charge enclosed in the volume Δv.

But $$Q = \oint_S \overline{D}\cdot d\overline{S} \text{ by Gauss's law} \qquad \text{... (2)}$$

To apply Gauss's law, we have assumed a differential volume element as the Gaussian surface, over which $\overline{D}$ is constant. Hence equations (1) and (2) can be equated in limiting case as $\Delta v \to 0$.

$$\therefore \quad \oint_S \overline{D}\cdot d\overline{S} = \lim_{\Delta v\to 0}\left(\frac{\partial D_x}{\partial x} + \frac{\partial D_y}{\partial y} + \frac{\partial D_z}{\partial z}\right)\Delta v$$

$$\therefore \frac{\partial D_x}{\partial x} + \frac{\partial D_y}{\partial y} + \frac{\partial D_z}{\partial z} = \lim_{\Delta v\to 0}\frac{Q}{\Delta v} = \lim_{\Delta v\to 0}\frac{\oint_S \overline{D}\cdot d\overline{S}}{\Delta v} \qquad \text{... (3)}$$

Thus in general if $\overline{A}$ is any vector say force, velocity, temperature gradient etc. then,

$$\frac{\partial A_x}{\partial x} + \frac{\partial A_y}{\partial y} + \frac{\partial A_z}{\partial z} = \lim_{\Delta v\to 0}\frac{\oint_S \overline{A}\cdot d\overline{S}}{\Delta v} \qquad \text{... (4)}$$

This mathematical operation on $\overline{A}$ is called a **divergence.** It is denoted as **div** $\overline{A}$. Hence mathematically divergence is given by,

$$\boxed{\text{div}\,\overline{A} = \lim_{\Delta v\to 0}\frac{\oint_S \overline{A}\cdot d\overline{S}}{\Delta v} = \frac{\partial A_x}{\partial x} + \frac{\partial A_y}{\partial y} + \frac{\partial A_z}{\partial z}} \qquad \text{... (5)}$$

3.10.1 Physical Meaning of Divergence

From the equation (5), the physical meaning of divergence can be obtained. Let $\overline{\mathbf{A}}$ be the flux density vector then,

the divergence of the vector flux density $\overline{\mathbf{A}}$ is the outflow of flux from a small closed surface per unit volume as the volume shrinks to zero.

Hence the divergence of $\overline{\mathbf{A}}$ at a given point is a measure of how much the field represented by $\overline{\mathbf{A}}$ diverges or converges from that point. If the field is diverging at point P of vector field $\overline{\mathbf{A}}$ as shown in the Fig. 3.23 (a), then divergence of $\overline{\mathbf{A}}$ at point P is positive. The field is spreading out from point P. If the field is converging at the point P as shown in the Fig. 3.23 (b), then the divergence of $\overline{\mathbf{A}}$ at the point P is negative. It is practically a convergence i.e. negative of divergence. If the field at point P is as shown in the Fig. 3.23 (c), so whatever field is converging, same is diverging then the divergence of $\overline{\mathbf{A}}$ at point P is zero.

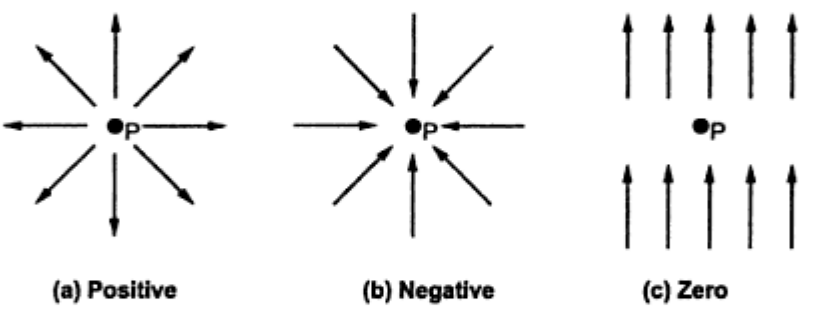

Fig. 3.23 Divergence at P

Practically consider a tube of a vehicle in which air is filled at a pressure. If it is punctured, then air inside tries to rush out from a tube through a small hole. Thus the velocity of air at the hole is greatest while away from the hole it is less. If now any closed surface is considered inside the tube, at one end velocity field is less while from other end it has higher value, as air rushes towards the hole. Hence the divergence of such velocity inside is positive. This is shown in the Fig. 3.24 (a) and (b).

As seen from the Fig. 3.24 (b), the air velocity is a function of distance and hence divergence of velocity is positive. The density of lines near hole is high showing higher air velocity. The source of such velocity lines is throughout the tube and hence anywhere inside the tube, at any point the divergence is positive.

If there is a hollow tube open from both ends then air enters from one end and passes through the tube and leaves from other end. This is shown in the Fig. 3.24 (c). The velocity of air is constant everywhere inside the tube. In such a case the divergence of the velocity field is zero, inside the tube.

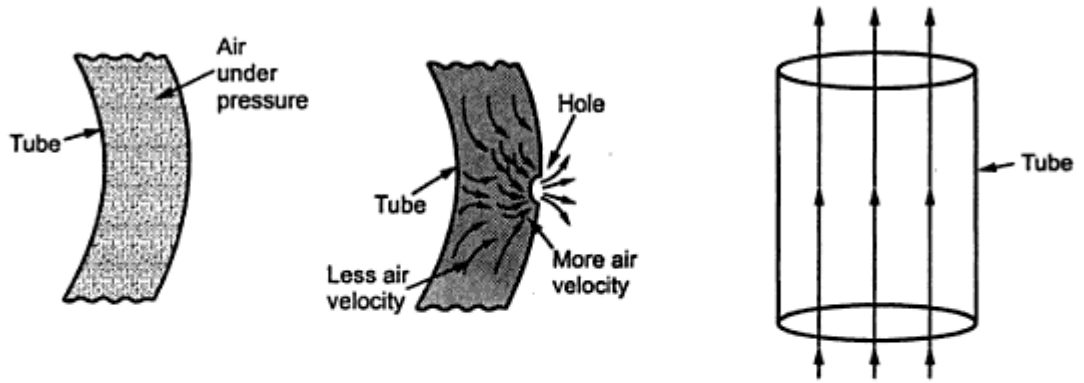

(a) Tube (b) Punctured tube (c) Hollow tube

Fig. 3.24 Concept of divergence

A positive divergence for any vector quantity indicates a **source** of that vector quantity at that point. A negative divergence for any vector quantity indicates a **sink** of that vector quantity at that point. A zero divergence indicates there is no source or sink exists at that point.

In short, if more lines enter a small volume than the lines leaving it, there is positive divergence. If more lines leave a small volume than the lines entering it, there is negative divergence. If the same number of lines enter and leave a small volume, the field has zero divergence. Note that the volume must be infinitesimally small, shrinking to zero at that point, where divergence is obtained.

As the result of divergence of a vector field is a scalar, the divergence indicates how much flux lines are leaving a small volume, per unit volume and there is no direction associated with the divergence.

3.10.2 The Vector Operator ∇

The divergence of the vector field $\overline{\mathbf{A}}$ is given by,

$$\text{div } \overline{\mathbf{A}} = \frac{\partial A_x}{\partial x} + \frac{\partial A_y}{\partial y} + \frac{\partial A_z}{\partial z}$$

The **divergence of a vector is a scalar quantity.**

The divergence operation can be represented by the use of mathematical operator called **del operator** ∇ which is a **vector operator**. It is given by,

$$\nabla = \frac{\partial}{\partial x}\overline{a}_x + \frac{\partial}{\partial y}\overline{a}_y + \frac{\partial}{\partial z}\overline{a}_z \qquad \text{... (6)}$$

Now the $\overline{\mathbf{A}}$ is a vector field and ∇ is also a vector. The result of divergence is a scalar. Thus to get the scalar from the two vectors, it is necessary to take **dot product** of the two.

If $\overline{\mathbf{A}} = A_x \bar{a}_x + A_y \bar{a}_y + A_z \bar{a}_z$ then

$$\nabla \cdot \overline{\mathbf{A}} = \left[\frac{\partial}{\partial x}\bar{a}_x + \frac{\partial}{\partial y}\bar{a}_y + \frac{\partial}{\partial z}\bar{a}_z\right] \cdot \left[A_x \bar{a}_x + A_y \bar{a}_y + A_z \bar{a}_z\right]$$

Now $\bar{a}_x \cdot \bar{a}_x = \bar{a}_y \cdot \bar{a}_y = \bar{a}_z \cdot \bar{a}_z = 1$

While other dot products such as $\bar{a}_x \cdot \bar{a}_y$ etc. are zero.

$$\therefore \quad \nabla \cdot \overline{\mathbf{A}} = \frac{\partial(A_x)}{\partial x} + \frac{\partial(A_y)}{\partial y} + \frac{\partial(A_z)}{\partial z} = \frac{\partial A_x}{\partial x} + \frac{\partial A_y}{\partial y} + \frac{\partial A_z}{\partial z}$$

$$\therefore \quad \nabla \cdot \overline{\mathbf{A}} = \text{div } \overline{\mathbf{A}} \qquad \text{... (7)}$$

Note the following observations regarding ∇ :

1. ∇ is a mathematical operator and need not be involved always in the dot product.

2. It may be operated on a scalar field to obtain vector result. Thus if m is a scalar field then,

$$\nabla m = \left(\frac{\partial}{\partial x}\bar{a}_x + \frac{\partial}{\partial y}\bar{a}_y + \frac{\partial}{\partial z}\bar{a}_z\right) m = \frac{\partial m}{\partial x}\bar{a}_x + \frac{\partial m}{\partial y}\bar{a}_y + \frac{\partial m}{\partial z}\bar{a}_z$$

3. The ∇ operator does not have any other specific form in different coordinate systems. Whatever may be the coordinate system in which $\overline{\mathbf{A}}$ is represented, $\nabla \cdot \overline{\mathbf{A}}$ represents a divergence of $\overline{\mathbf{A}}$.

3.10.3 Divergence in Different Coordinate Systems

In a cartesian system, the differential volume unit is given by dv = dx dy dz while in cylindrical system it is given by dv = r dr dϕ dz. In the spherical system it is given by dv = $r^2 \sin\theta \, dr \, d\theta \, d\phi$. Thus the expressions for divergence in different coordinate systems are different.

These expressions of divergence, in different coordinate systems are given by,

$$\nabla \cdot \overline{\mathbf{A}} = \text{div } \overline{\mathbf{A}} = \frac{\partial A_x}{\partial x} + \frac{\partial A_y}{\partial y} + \frac{\partial A_z}{\partial z} \qquad \text{... Cartesian}$$

$$\nabla \cdot \overline{\mathbf{A}} = \text{div } \overline{\mathbf{A}} = \frac{1}{r}\frac{\partial}{\partial r}(r A_r) + \frac{1}{r}\frac{\partial A_\phi}{\partial \phi} + \frac{\partial A_z}{\partial z} \qquad \text{... Cylindrical}$$

$$\nabla \cdot \overline{\mathbf{A}} = \text{div } \overline{\mathbf{A}} = \frac{1}{r^2}\frac{\partial}{\partial r}(r^2 A_r) + \frac{1}{r\sin\theta}\frac{\partial}{\partial \theta}(\sin\theta A_\theta) + \frac{1}{r\sin\theta}\frac{\partial A_\phi}{\partial \phi} \qquad \text{... Spherical}$$

The relations are frequently required in the engineering electromagnetics.

3.10.4 Properties of Divergence of Vector Field

The various properties of divergence of a vector field are,

1. The divergence produces a scalar field as the dot product is involved in the operation. The result does not have direction associated with it.

2. The divergence of a scalar has no meaning. Thus if m is a scalar field then $\nabla \cdot m$ has no meaning. Note that ∇ operator can operate on scalar field but dot product i.e. divergence of a scalar has no meaning.

3. $\nabla \cdot (\overline{A} + \overline{B}) = \nabla \cdot \overline{A} + \nabla \cdot \overline{B}$

3.11 Maxwell's First Equation

The divergence of electric flux density $\overline{D}$ is given by,

$$\text{div } \overline{D} = \lim_{\Delta v \to 0} \frac{\oint_S \overline{D} \cdot d\overline{S}}{\Delta v} \quad \text{... (1)}$$

$$= \frac{\partial D_x}{\partial x} + \frac{\partial D_y}{\partial y} + \frac{\partial D_z}{\partial z}$$

According to Gauss's law, it is known that

$$\psi = Q = \oint_S \overline{D} \cdot d\overline{S} \quad \text{... (2)}$$

Expressing Gauss's law per unit volume basis

$$\frac{Q}{\Delta v} = \frac{\oint_S \overline{D} \cdot d\overline{S}}{\Delta v} \quad \text{... (3)}$$

Taking lim $\Delta v \to 0$ i.e. volume shrinks to zero,

$$\lim_{\Delta v \to 0} \frac{Q}{\Delta v} = \lim_{\Delta v \to 0} \frac{\oint_S \overline{D} \cdot d\overline{S}}{\Delta v} \quad \text{... (4)}$$

But $$\lim_{\Delta v \to 0} \frac{Q}{\Delta v} = \rho_v \text{ at that point} \quad \text{... (5)}$$

The equation (5) gives the volume charge density at the point where divergence is obtained.

Equating (1) and (5),

$$\boxed{\begin{aligned} \text{div } \overline{D} &= \rho_v \\ \text{i.e.} \quad \nabla \cdot \overline{D} &= \rho_v \end{aligned}} \quad \text{... (6)}$$

Ex. 3.8 *Let* $\overline{D} = 5r^2\,\overline{a}_r$ *mC/m²* *for* $r < 0.08$ *m and* $\overline{D} = \frac{0.1}{r^2}\,\overline{a}_r$ *mC/m²* *for* $r > 0.08$ *m.*

i) Find charge density for r = 0.06 m.
ii) Find charge density for r = 0.1 m. **[V.T.U. Aug-2001]**

Sol. : Assuming given $\overline{D}$ is in spherical coordinate system. From the Gauss's law in point form,

$$\nabla \cdot \overline{D} = \rho_v$$

and
$$\nabla \cdot \overline{D} = \frac{1}{r^2}\frac{\partial}{\partial r}\left(r^2 D_r\right) + \frac{1}{r\sin\theta}\frac{\partial}{\partial \theta}\left(\sin\theta\, D_\theta\right) + \frac{1}{r\sin\theta}\frac{\partial D_\phi}{\partial \phi}$$

i) For $r < 0.08$, $\overline{D} = 5r^2\,\overline{a}_r$ m C / m²

$\therefore$ $D_r = 5r^2$, $D_\theta = 0$, $D_\phi = 0$

$$\therefore \quad \nabla \cdot \overline{D} = \frac{1}{r^2}\frac{\partial}{\partial r}\left(r^2\, 5r^2\right) = \frac{1}{r^2}\frac{\partial}{\partial r}\left(5r^4\right) = \frac{20\, r^3}{r^2} = 20\,r = \rho_v$$

At $r = 0.06$ m, $\rho_v = 20 \times (0.06) = 1.2$ mC/m³

ii) For $r > 0.08$, $\overline{D} = \frac{0.1}{r^2}\,\overline{a}_r$ mC/m²

$$\therefore \quad D_r = \frac{0.1}{r^2}, \quad D_\theta = 0, \quad D_\phi = 0$$

$$\therefore \quad \nabla \cdot \overline{D} = \frac{1}{r^2}\frac{\partial}{\partial r}\left(r^2 \times \frac{0.1}{r^2}\right) = \frac{1}{r^2}\frac{\partial}{\partial r}(0.1) = 0 = \rho_v$$

$$\therefore \quad \rho_v = 0 \text{ at } r = 0.1 \text{ m}$$

3.12 Divergence Theorem

From the Gauss's law we can write,

$$Q = \oint_S \overline{D} \cdot d\overline{S} \qquad \text{... (1)}$$

While the charge enclosed in a volume is given by,

$$Q = \int_v \rho_v \, dv \qquad \text{... (2)}$$

But according to Gauss's law in the point form,

$$\nabla \cdot \overline{D} = \rho_v \qquad \text{... (3)}$$

Using in (2),

$$Q = \int_v \left(\nabla \cdot \overline{D}\right) dv \qquad \text{... (4)}$$

Equating (1) and (4),

$$\boxed{\oint_S \overline{D} \cdot d\overline{S} = \int_v \left(\nabla \cdot \overline{D}\right) dv} \qquad \text{... (5)}$$

The equation (5) is called **divergence theorem**. It is also called the **Gauss - Ostrogradsky theorem**. The theorem can be stated as,

The integral of the normal component of any vector field over a closed surface is equal to the integral of the divergence of this vector field throughout the volume enclosed by that closed surface.

The theorem can be applied to any vector field but partial derivatives of that vector field must exist. The equation (5) is the divergence theorem as applied to the flux density. Both sides of the divergence theorem give the net charge enclosed by the closed surface i.e. net flux crossing the closed surface.

With the help of the divergence theorem, the surface integral can be converted into a volume integral, provided that the closed surface encloses certain volume. Thus volume integral on right hand side of the theorem must be calculated over a volume which must be enclosed by the closed surface on left handside. The theorem is applicable only under this condition.

Points to remember while solving problems.

1. Draw the sketch of the surface enclosed by the given conditions.

2. $\overline{D}$ acts within the region bounded by given conditions towards the various surfaces. Thus note the direction of surface with respect to region in which $\overline{D}$ is given to give proper sign to the unit vector while defining $d\overline{S}$. For example, consider the region bounded by two planes as shown in the Fig. 3.25. For surface 1, with respect to $\overline{D}$ in the region, dS is in $-\overline{a}_y$ direction. While for surface 2, with respect to $\overline{D}$ in the region, dS is in $+\overline{a}_y$ direction.

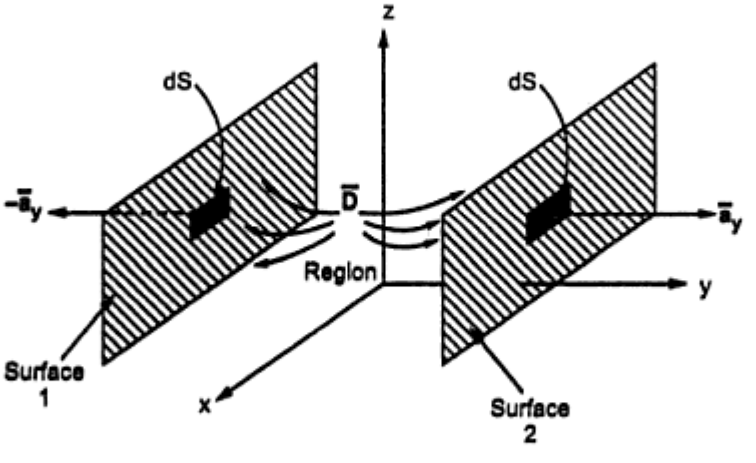

Fig. 3.25

3. Then evaluate $\oint_S \overline{D} \cdot d\overline{S}$ over all the possible surfaces.

4. Evaluate $\int_v (\nabla \cdot \overline{D})\, dv$ to verify the divergence theorem. Take care of variables in the partial derivatives.

Ex. 3.9 *Given that $\overline{A} = 30e^{-r}\,\overline{a}_r - 2z\,\overline{a}_z$ in the cylindrical coordinates. Evaluate both sides of the divergence theorem for the volume enclosed by r = 2, z = 0 and z = 5.*

[M.U. Dec-99, May-2002]

Sol. : The divergence theorem states that

$$\oint_S \overline{A} \cdot d\overline{S} = \int_v (\nabla \cdot \overline{A})\, dv$$

Now $$\oint_S \overline{A} \cdot d\overline{S} = \left[\oint_{side} + \oint_{top} + \oint_{bottom}\right] \overline{A} \cdot d\overline{S}$$

Consider $d\overline{S}$ normal to $\overline{a}_r$ direction which is for the side surface.

$$\therefore \quad d\overline{S} = r\, d\phi\, dz\, \overline{a}_r$$

$$\therefore \quad \overline{A} \cdot d\overline{S} = \left(30e^{-r}\,\overline{a}_r - 2z\overline{a}_z\right) \cdot r\, d\phi\, dz\, \overline{a}_r$$

$$= 30\, r\, e^{-r} \left(\overline{a}_r \cdot \overline{a}_r\right) d\phi\, dz = 30\, r\, e^{-r}\, d\phi\, dz$$

$$\therefore \quad \oint_{side} \overline{A} \cdot d\overline{S} = \int_{\phi=0}^{2\pi} \int_{z=0}^{5} 30\, r\, e^{-r}\, d\phi\, dz \quad \text{with} \quad r = 2$$

$$= 30 \times 2 \times e^{-2} \times [\phi]_0^{2\pi} \times [z]_0^5 = 255.1$$

The $d\overline{S}$ on top has direction $\overline{a}_z$ hence for top surface,

$$d\overline{S} = r\, dr\, d\phi\, \overline{a}_z$$

$$\therefore \quad \overline{A} \cdot d\overline{S} = \left(30e^{-r}\,\overline{a}_r - 2\,z\overline{a}_z\right) \cdot r\, dr\, d\phi\, \overline{a}_z$$

$$= -2\, z\, r\, dr\, d\phi \qquad \ldots (\overline{a}_z \cdot \overline{a}_z = 1)$$

$$\therefore \quad \oint_{top} \overline{A} \cdot d\overline{S} = \int_{\phi=0}^{2\pi} \int_{r=0}^{2} -2\, z\, r\, dr\, d\phi \quad \text{with} \quad z = 5$$

$$= -2 \times 5 \times \left[\frac{r^2}{2}\right]_0^2 \times [\phi]_0^{2\pi} = -40\pi$$

While $d\bar{S}$ for bottom has direction $-\bar{a}_z$ hence for bottom surface,

$$d\bar{S} = r\,dr\,d\phi\,(-\bar{a}_z)$$

$$\therefore \quad \bar{A}\cdot d\bar{S} = \left(30\,e^{-r}\,\bar{a}_r - 2z\bar{a}_z\right)\cdot r\,dr\,d\phi\,(-\bar{a}_z)$$

$$= 2\,z\,r\,dr\,d\phi \qquad \ldots (\bar{a}_z\cdot\bar{a}_z = 1)$$

But z = 0 for the bottom surface, as shown in the Fig. 3.26.

$$\therefore \quad \oint_S \bar{A}\cdot d\bar{S} = 255.1 - 40\,\pi + 0$$

$$= 129.4363$$

This is the **left hand side of divergence theorem.**

Now evaluate $\int_v (\nabla\cdot\bar{A})\,dv$

$$\nabla\cdot\bar{A} = \frac{1}{r}\frac{\partial}{\partial r}(r\,A_r) + \frac{1}{r}\frac{\partial A_\phi}{\partial\phi} + \frac{\partial A_z}{\partial z}$$

and $A_r = 30\,e^{-r}$, $A_\phi = 0$, $A_z = -2\,z$

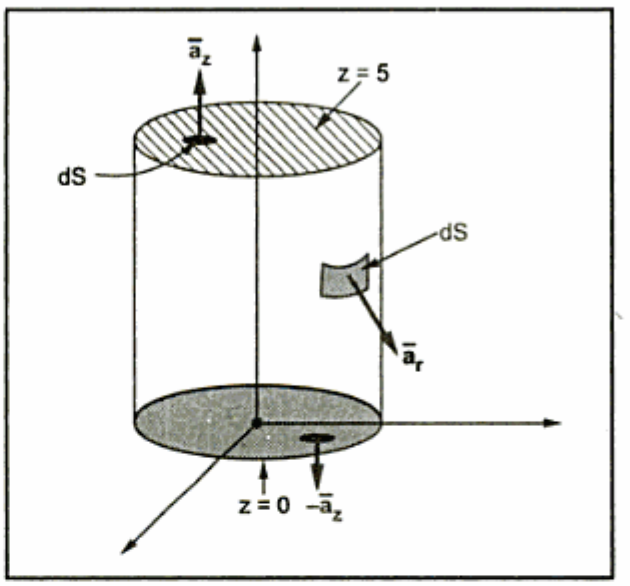

Fig. 3.26

$$\therefore \quad \nabla\cdot\bar{A} = \frac{1}{r}\frac{\partial}{\partial r}\left(30\,r\,e^{-r}\right) + 0 + \frac{\partial}{\partial z}(-2\,z)$$

$$= \frac{1}{r}\left\{30\,r\left(-e^{-r}\right) + 30\,e^{-r}(1)\right\} + (-2)$$

$$= -30\,e^{-r} + \frac{30}{r}\,e^{-r} - 2$$

$$\therefore \quad \int_v (\nabla\cdot\bar{A})\,dv = \int_{z=0}^{5}\int_{\phi=0}^{2\pi}\int_{r=0}^{2}\left(-30\,e^{-r} + \frac{30}{r}\,e^{-r} - 2\right) r\,dr\,d\phi\,dz$$

$$= \int_{z=0}^{5}\int_{\phi=0}^{\pi}\int_{r=0}^{2}\left(-30\,r\,e^{-r} + 30\,e^{-r} - 2r\right)\,dr\,d\phi\,dz$$

$$= \left\{-30\,r\left[\frac{e^{-r}}{-1}\right] - \int(-30)\left[\frac{e^{-r}}{-1}\right]dr + 30\left[\frac{e^{-r}}{-1}\right] - \left[2\frac{r^2}{2}\right]\right\}[z]_0^5\,[\phi]_0^{2\pi}$$

Obtained using integration by parts.

$$= \left[30\,r\,e^{-r} + 30\,e^{-r} - 30\,e^{-r} - r^2\right]_0^2 [5][2\pi]$$

$$= \left[60\,e^{-2} - 2^2\right][10\pi] = 129.437$$

This is same as obtained from the left hand side.

Ex. 3.10 *Given that* $\overline{D} = \frac{5r^2}{4}\,\overline{a}_r\,C/m^2$. *Evaluate both the sides of divergence theorem for the volume enclosed by* $r = 4m$ *and* $\theta = \pi/4$. **[P.U. May-2000, May-2001]**

Sol. : The given $\overline{D}$ is in spherical coordinates. The volume enclosed is shown in the Fig. 3.37.

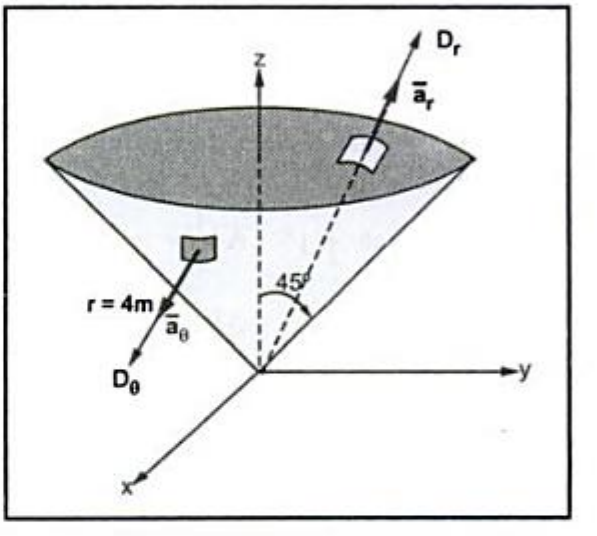

Fig. 3.37

According to divergence theorem,

$$\oint_S \overline{D}\cdot d\overline{S} = \int_v (\nabla\cdot\overline{D})\,dv$$

The given $\overline{D}$ has only radial component as given. Hence $D_r = \frac{5\,r^2}{4}$ while $D_\theta = D_\phi = 0$.

Hence $\overline{D}$ has a value only on the surface r = 4m.

Consider dS normal to the $\overline{a}_r$ direction i.e. $r^2 \sin\theta\, d\theta\, d\phi$

$$\therefore \quad d\overline{S} = r^2 \sin\theta\, d\theta\, d\phi\, \overline{a}_r$$

$$\therefore \quad \overline{D}\cdot d\overline{S} = \left(r^2 \sin\theta\, d\theta\, d\phi\right)\left(\frac{5r^2}{4}\right) = \frac{5}{4}\,r^4 \sin\theta\, d\theta\, d\phi \qquad \ldots \left(\overline{a}_r\cdot\overline{a}_r = 1\right)$$

$$\therefore \quad \oint_S \overline{D}\cdot d\overline{S} = \int_{\phi=0}^{2\pi}\int_{\theta=0}^{\pi/4} \frac{5}{4}\,r^4 \sin\theta\, d\theta\, d\phi$$

$$= \frac{5}{4}\,r^4\,[-\cos\theta]_0^{\pi/4}\,[\phi]_0^{2\pi} \quad \text{and} \quad r = 4m$$

$$= \frac{5}{4}(4)^4\left[-\cos\frac{\pi}{4} - (-\cos 0)\right][2\pi]$$

$$= 588.896\ C$$

To evaluate right hand side, find $\nabla \cdot \overline{D}$.

$$\nabla \cdot \overline{D} = \frac{1}{r^2}\frac{\partial}{\partial r}\left(r^2 D_r\right) + \frac{1}{r\sin\theta}\frac{\partial}{\partial\theta}\left(\sin\theta D_\theta\right) + \frac{1}{r\sin\theta}\frac{\partial D_\phi}{\partial\phi}$$

$$= \frac{1}{r^2}\frac{\partial}{\partial r}\left[r^2\left(\frac{5}{4}r^2\right)\right] + 0 + 0 = \frac{5}{4r^2}\frac{\partial}{\partial r}\left(r^4\right)$$

$$= \frac{5}{4r^2}\left(4r^3\right) = 5r$$

In spherical coordinates, $dv = r^2 \sin\theta\, dr\, d\theta\, d\phi$

$$\therefore \quad \int_v \left(\nabla \cdot \overline{D}\right) dv = \int_{\phi=0}^{2\pi}\int_{\theta=0}^{\pi/4}\int_{r=0}^{4} (5r)\left(r^2 \sin\theta\, dr\, d\theta\, d\phi\right)$$

$$= 5\left[\frac{r^4}{4}\right]_0^4 \left[-\cos\theta\right]_0^{\pi/4} \left[\phi\right]_0^{2\pi}$$

$$= 5 \times \frac{4^4}{4} \times \left[-\cos\frac{\pi}{4} - (-\cos 0)\right] \times 2\pi$$

$$= 588.896 \text{ C}$$

Ex. 3.11 *Find the total charge in a volume defined by the six planes for which* $1 \le x \le 2$, $2 \le y \le 3$, $3 \le z \le 4$ *if,*
$\overline{D} = 4x\ \overline{a}_x + 3y^2\ \overline{a}_y + 2z^3\ \overline{a}_z\ C/m^2$. **[V.T.U. Aug-2000]**

Sol. : The volume bounded by the given planes is a cube. To evaluate total charge use Gauss's law.

$$Q = \oint_S \overline{D} \cdot d\overline{S}$$

But to evaluate $\overline{D} \cdot d\overline{S}$, it is necessary to consider all six faces of the cube. Let us find $d\overline{S}$ for each surface.

1) Front surface (x = 2), dS = dy dz, direction = $\overline{a}_x$, $d\overline{S}$ = dy dz $\overline{a}_x$

2) Back surface (x = 1), dS = dy dz, direction = $-\overline{a}_x$, $d\overline{S}$ = – dy dz $\overline{a}_x$

3) Right side (y = 3), dS = dx dz, direction = $\overline{a}_y$, $d\overline{S}$ = dx dz $\overline{a}_y$

4) Left side (y = 2), dS = dx dz, direction = $-\overline{a}_y$, $d\overline{S}$ = – dx dz $\overline{a}_y$

5) Top side (z = 4), dS = dx dy, direction = $\overline{a}_z$, $d\overline{S}$ = dx dy $\overline{a}_z$

6) Bottom side (z = 3), dS = dx dy, direction = – $\overline{a}_z$, $d\overline{S}$ = – dx dy $\overline{a}_z$

As the plane is infinite, half the total flux originating from charge will pass through the plane.

$$\therefore \qquad \psi = \frac{Q}{2} = \frac{25}{2} = 12.5 \ \mu C \qquad \text{... As } \psi_{total} = Q_{total}$$

Ex. 3.13 *In a certain region of space,* $\overline{D} = 2xy\,\overline{a}_x + 3yz\,\overline{a}_y + 4zx\,\overline{a}_z$. *Evaluate the amount of electric flux that passes through the portion bounded by* $-1 \le y \le 2$ *and* $0 \le z \le 4$ *in the* $x = 3$ *plane using Gauss's law.* **[V.T.U. March-2001]**

Sol. : The portion is shown in the Fig. 3.31.

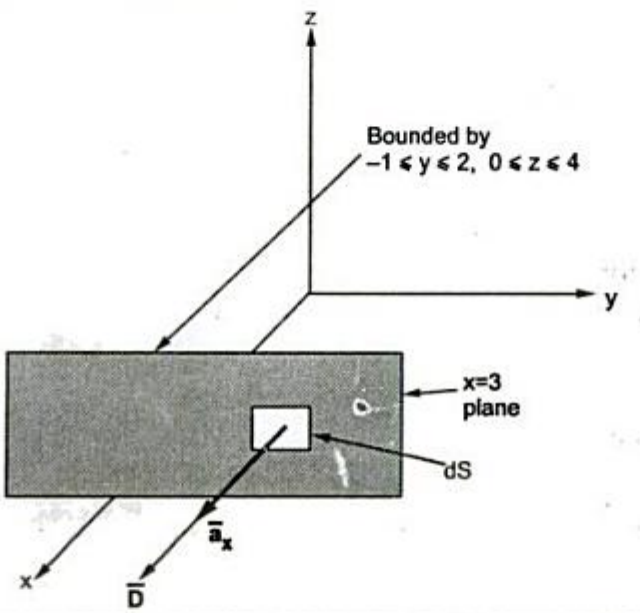

Fig. 3.31

The unit vector perpendicular to the plane x = 3 is $\overline{a}_x$ as the plane is parallel to yz plane. The portion of the plane is bounded by $-1 \le y \le 2$ and $0 \le z \le 4$. Consider the differential area dS of the portion normal to $\overline{a}_x$ direction.

$$\therefore \qquad d\overline{S} = dy\,dz\,\overline{a}_x$$

$$\therefore \qquad \overline{D} \cdot d\overline{S} = 2\,xy\,dy\,dz \qquad \text{... } (\overline{a}_x \cdot \overline{a}_x = 1,\ \overline{a}_x \cdot \overline{a}_y = 0,\ \overline{a}_x \cdot \overline{a}_z = 0)$$

According to Gauss's law,

$$\psi = \oint_S \overline{D} \cdot d\overline{S} = \int_{z=0}^{4} \int_{y=-1}^{2} 2\,xy\,dy\,dz$$

$$= 2x \int_{z=0}^{4} \left[\frac{y^2}{2}\right]_{-1}^{2} dz = 2x[z]_0^4 \left[\frac{2^2}{2} - \frac{(-1)^2}{2}\right]$$

$$= 2x \times 4 \times 1.5 = 12\,x$$

But $x = 3$ for the portion,

$$\therefore \qquad \psi = 12 \times 3 = 36 \text{ C}$$

This is flux passing through the surface.

Ex. 3.14 *The flux density within the cylindrical volume bounded by r = 5m, z = 0 and z = 2m is given by,*
$\overline{D} = 30e^{-r}\,\overline{a}_r - 2z\,\overline{a}_z\ C/m^2$
What is the total outward flux crossing the surface of the cylinder ?

Sol. : The cylinder is shown in the Fig. 3.32

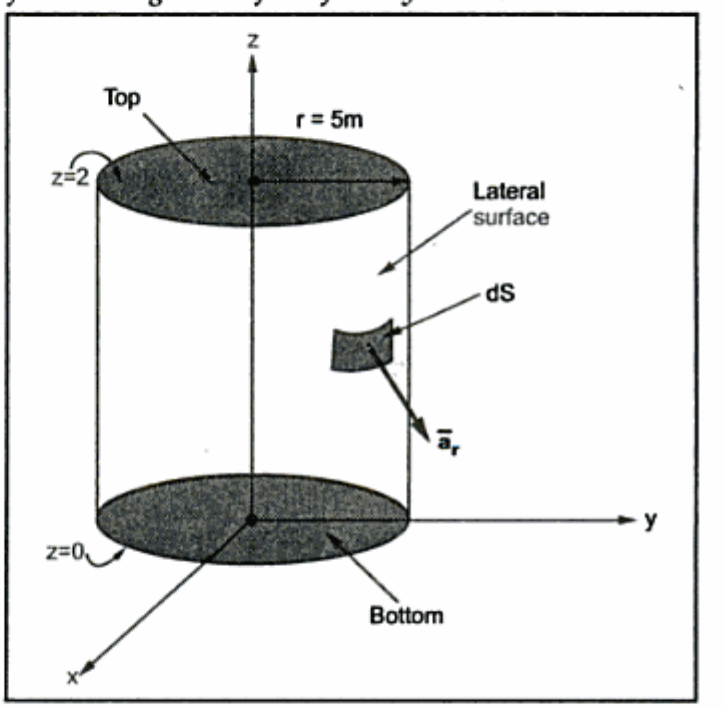

Fig. 3.32

As the total outward flux is asked all surfaces, lateral, top and bottom must be considered.

Case 1 : Consider the lateral surface, the normal direction to which is $\overline{a}_r$.

Consider differential surface area normal to $\overline{a}_r$ which is $dS = r\,d\phi\,dz$.

$$\therefore\ d\overline{S} = r\,d\phi\,dz\,\overline{a}_r$$

$$\therefore \qquad \overline{D} \cdot d\overline{S} = \left[30e^{-r}\,\overline{a}_r - 2z\overline{a}_z\right] \cdot r\,d\phi\,dz\,\overline{a}_r$$

$$= 30\,r\,e^{-r}\,d\phi\,dz \qquad \ldots \left(\overline{a}_r \cdot \overline{a}_r = 1,\ \overline{a}_r \cdot \overline{a}_z = 0\right)$$

According to Gauss's law,

$$\psi_1 = \oint_{\text{lateral}} \overline{D} \cdot d\overline{S} = \int_{z=0}^{2} \int_{\phi=0}^{2\pi} 30\,r\,e^{-r}\,d\phi\,dz \qquad \ldots\ r = 5 \text{ constant}$$

$$= 30\,r\,e^{-r}\,[\phi]_0^{2\pi}\,[z]_0^2 \qquad \ldots\ r = 5 \text{ constant}$$

$$= 30 \times 5 \times e^{-5} \times 2\pi \times 2 = 12.7 \text{ C}$$

Case 2 : Top surface, for which normal direction is $\bar{a}_z$. The differential area $dS = r\,dr\,d\phi$ normal to $\bar{a}_z$.

$$\therefore \quad d\bar{S} = r\,dr\,d\phi\;\bar{a}_z \quad \text{and} \quad z = 2 \text{ for top surface}$$

$$\therefore \quad \bar{D}\cdot d\bar{S} = \left(30e^{-r}\bar{a}_r - 2z\bar{a}_z\right)\cdot\left(r\,dr\,d\phi\,\bar{a}_z\right)$$

$$= -2\,zr\,dr\,d\phi \qquad \ldots \left(\bar{a}_z\cdot\bar{a}_z = 1,\ \bar{a}_r\cdot\bar{a}_z = 0\right)$$

$$\therefore \quad \psi_2 = \oint_{top} \bar{D}\cdot d\bar{S} = \int_{\phi=0}^{2\pi}\int_{r=0}^{5} -2\,z\,r\,dr\,d\phi \quad \text{with } z = 2$$

$$= -2z\left[\frac{r^2}{2}\right]_0^5 \left[\phi\right]_0^{2\pi} \qquad \ldots z = 2 \text{ constant}$$

$$= -2\times 2\times 12.5\times 2\pi = -314.1592\text{ C}$$

Case 3 : Bottom surface, for which normal direction is $-\bar{a}_z$ with respect to region. The differential area $dS = r\,dr\,d\phi$ normal to $\bar{a}_z$.

$$\therefore \quad d\bar{S} = r\,dr\,d\phi\,(-\bar{a}_z) \quad \text{and} \quad z = 0 \text{ for bottom}$$

$$\therefore \quad \bar{D}\cdot d\bar{S} = \left(30e^{-r}\bar{a}_r - 2z\bar{a}_z\right)\cdot\ r\,dr\,d\phi\ \ (-\bar{a}_z)$$

$$= 2\,zr\,dr\,d\phi \quad \text{with } z = 0$$

$$= 0$$

$$\therefore \quad \psi_3 = \oint_{bottom} \bar{D}\cdot d\bar{S} = 0 \quad \text{as } z = 0 \text{ for bottom}$$

$$\therefore \quad \psi_{net} = \psi_1 + \psi_2 + \psi_3 = -301.4592\text{ C}$$

Ex. 3.15 *A nonuniform surface charge density of $\left(5r/r^2+1\right)nC/m^2$ lies in the plane $z = 2$ where $r < 5$ and $\rho_S = 0$ for $r > 5$.*
a) How much electric flux leaves the circular region $r < 5$, $z = 2$?
b) How much electric flux crosses the $z = 0$ plane in $-\bar{a}_z$ direction ?

Sol. : a) The flux leaving is charge enclosed.

$$\psi = Q = \oint_S \rho_S\,dS = \int_{\phi=0}^{2\pi}\int_{r=0}^{5} \frac{5r}{r^2+1}\,r\,dr\,d\phi$$

The $dS = r\,dr\,d\phi$ as the ρ_S is in plane $z = 2$, to which the normal direction is $\bar{a}_z$, as shown in the Fig. 3.33.

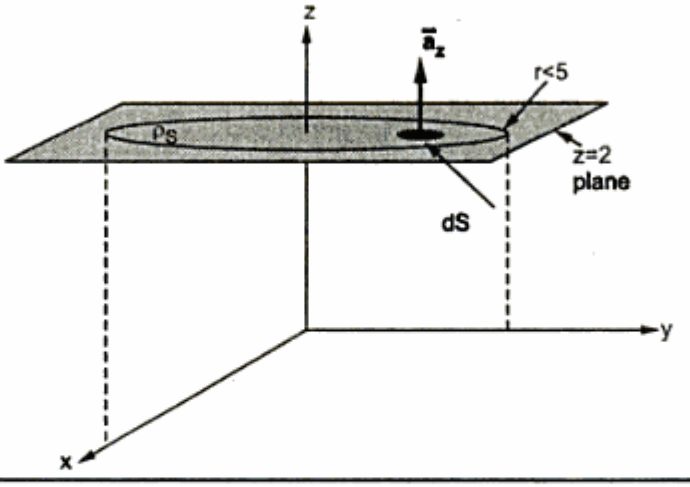

Fig. 3.33

$$\therefore \qquad \psi = \int_{\phi=0}^{2\pi}\int_{r=0}^{5} \frac{5r^2}{r^2+1}\, dr\, d\phi$$

Now $\displaystyle\int \frac{x^2 dx}{a x^2 + c} = \frac{x}{a} - \frac{c}{a}\left[\frac{1}{\sqrt{ac}} \tan^{-1}\left(x\sqrt{\frac{a}{c}}\right)\right]$

$$\therefore \qquad \psi = 5[\phi]_0^{2\pi}\left[\frac{r}{1} - \left(\tan^{-1}[r]\right)\right]_0^5 \qquad \text{... } a = c = 1$$

$$= 5 \times 2\pi \times \left[5 - \tan^{-1} 5\right] = 113.932 \text{ nC} \qquad \text{... use radian mode}$$

b) Half of the flux leaves in $\bar{a}_z$ direction while other half leaves in $-\bar{a}_z$ direction.

$\therefore$ ψ leaving in $-\bar{a}_z$ direction $= \dfrac{113.932}{2} = 56.966$ nC

Ex. 3.16 *If $\overline{D} = 12x^2\,\bar{a}_x - 3z^3\,\bar{a}_y - 9yz^2\,\bar{a}_z\, C/m^3$ in free space, specify the point within the cube $1 \le x, y, z \le 2$ at which the following quantity is maximum and give that maximum value.*
a) $|\overline{D}|$ b) $|\rho_v|$ c) ρ_v **[P.U. Dec-91]**

Sol. : a) From given $\overline{D}$

$$|\overline{D}| = \sqrt{(12x^2)^2 + (-3z^3)^2 + (-9yz^2)^2}$$

$$= \sqrt{144x^4 + 9z^6 + 81y^2z^4}$$

The $|\overline{D}|$ is maximum, when x, y and z are maximum in the given region.

$$\therefore \qquad x = y = z = 2 \qquad \text{... maximum values}$$

$\therefore$ At P (2, 2, 2), $|\overline{D}|$ will be maximum.

$$|\overline{D}|_{max} = \sqrt{144 \times 2^4 + 9 \times 2^6 + 81 \times 2^2 \times 2^4} = 89.8 \ C/m^2$$

b) According to Gauss's law in point form,

$$\nabla \cdot \overline{D} = \rho_v$$

$$\therefore \quad \nabla \cdot \overline{D} = \frac{\partial D_x}{\partial x} + \frac{\partial D_y}{\partial y} + \frac{\partial D_z}{\partial z} = 24\,x + 0 - 18\,yz$$

$$\therefore \quad \rho_v = 24\,x - 18\,yz$$

$|\rho_v|$ will be maximum when x is minimum and yz are maximum. i.e. x = + 1 and y = z= 2.

$$\therefore \quad |\rho_v|_{max} = |24 \times (+1) - 18 \times 2 \times 2| = |+24 - 72| = 48 \ C/m^3$$

c) ρ_v is maximum when x is maximum i.e. 2 and y, z are minimum i.e. y = z = 1. Thus ρ_v is maximum at P (2, 1, 1).

$$\rho_v \ max = 24 \times 2 - 18 \times 1 \times (+1) = 30 \ C/m^3$$

Ex. 3.17 *Determine the net flux of the vector field* $\overline{D}(x,y,z) = 2x^2y\overline{a}_x + 2\overline{a}_y + y\overline{a}_z$ *emerging from the unit cube* $0 \le x, y, z \le 1$. **[M.U. May-2002]**

Sol. : The x, y and z coordinates are all positive for the cube. Hence the cube is as shown in the Fig. 3.34.

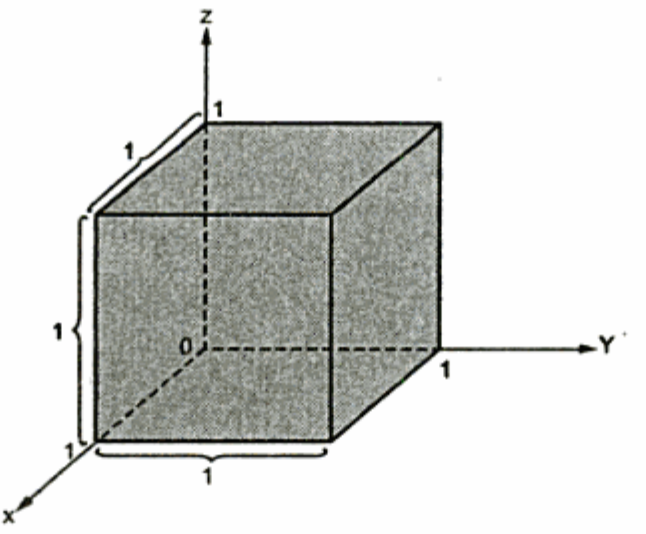

Fig. 3.34

Case II : Uniform line charge

For a uniform line charge, the flux density $\overline{D}$ in a cylindrical coordinate system is given by,

$$\overline{D} = \frac{\rho_L}{2\pi r}\,\overline{a}_r$$

Thus for $r > 0$, $D_r = \frac{\rho_L}{2\pi r}$ and $D_\phi = D_z = 0$

$$\therefore \quad \nabla \cdot \overline{D} = \frac{1}{r}\frac{\partial}{\partial r}(r D_r) + 0 + 0$$

$$= \frac{1}{r}\frac{\partial}{\partial r}\left[\frac{r \times \rho_L}{2\pi r}\right] = \frac{1}{r}\frac{\partial}{\partial r}\left(\frac{\rho_L}{2\pi}\right)$$

$$= 0 \qquad \ldots \frac{\rho_L}{2\pi} \text{ is constant}$$

Thus everywhere except at $r = 0$, the divergence of flux density due to uniform line charge is zero.

Key Point : *As $\overline{D} = \varepsilon \overline{E}$ and ε is a constant, the divergence of $\overline{E}$ due to point charge and uniform line charge is also zero everywhere except $r = 0$ where it is indeterminate.*

Ex. 3.21 *Let $\overline{D} = 10xyz\,\overline{a}_x + (6x^2 z + 5yz)\,\overline{a}_y + (6x^2 y + 4y^2)\,\overline{a}_z\ C/m^2$ then find the incremental amount of charge in a volume of $10^{-8}\ m^3$ located at,*
a) (0, 0, 0) b) (4, 2, –3) c) (4, y, – 3)
d) At what location in the cubical region $0 \le x, y, z \le 3$ should the small volume be located to contain a maximum charge ? Find the maximum charge.

Sol. : The volume is incremental so $dv = 10^{-8}\ m^3$

According to divergence theorem,

$$Q = \int_v (\nabla \cdot \overline{D})\, dv$$

$$\therefore \quad dQ = (\nabla \cdot \overline{D})\, dv = \text{Incremental charge in dv}$$

$$\therefore \quad \nabla \cdot \overline{D} = \frac{\partial D_x}{\partial x} + \frac{\partial D_y}{\partial y} + \frac{\partial D_z}{\partial z} = 10\,yz + 5z + 0$$

$$= 10\,yz + 5z$$

a) At P (0, 0, 0), $\nabla \cdot \overline{D} = 0$

$$\therefore \quad dQ = 0 \times dv = 0\ C$$

b) At P (4, 2, – 3), $\nabla \cdot \overline{D} = 10 \times 2 \times (-3) + 5 \times (-3) = -75$

$$\therefore \quad dQ = -75 \times 10^{-8} = -0.75\ \mu C$$

c) At P (4, y, – 3), $\nabla \cdot \overline{D} = 10\,y\,(-3) + (5)(-3) = -30\,y - 15$

$$\therefore \quad dQ = (-30\,y - 15) \times 10^{-8} = -(0.3\,y + 0.15)\ \mu C$$

d) dQ will be maximum when $\nabla \cdot \overline{D}$ is maximum. For this, y and z must be maximum. For given region $0 \le x, y, z \le 3$, the maximum values of y and z are 3. Hence at point (x, 3, 3) the dQ is at its maximum, x can take any value.

$$\therefore \quad dQ\ (max) = \nabla \cdot \overline{D}\Big|_{y=z=3} \times dv = \left[(10 \times 3 \times 3) + (5 \times 3)\right] dv$$

$$= 105 \times 10^{-8} = 1.05\ \mu C$$

Ex. 3.22 *A charge configuration is given by,*
$\rho_v = 5\,r\,e^{-2r}\ (C/m^3)$
Find $\overline{D}$ using Gauss's law. **[M.U. May-99]**

Sol. : Assume given ρ_v is in cylindrical coordinates. Let the Gaussian surface be a right circular cylinder of length L and radius r, with z axis as its axis, as shown in the Fig. 3.35. The charge density is a function of r alone hence flux is in radial direction and $\overline{D}$ also is directed radially outwards.

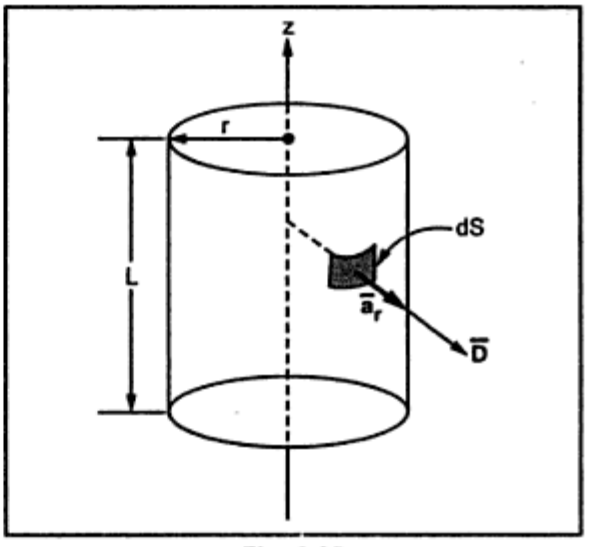

Fig. 3.35

$$\therefore \quad \overline{D} = D_r\,\overline{a}_r$$

Consider the differential surface area dS normal to $\overline{a}_r$ direction.

$$\therefore \quad d\overline{S} = r\,d\phi\,dz\,\overline{a}_r$$

$$\therefore \quad \overline{D} \cdot d\overline{S} = D_r\,r\,d\phi\,dz \qquad \ldots (\overline{a}_r \cdot \overline{a}_r = 1)$$

$$\therefore \quad Q = \oint_S \overline{D} \cdot d\overline{S} = \int_{z=0}^{L} \int_{\phi=0}^{2\pi} D_r\,r\,d\phi\,dz = D_r\,r\,[z]_0^L\,[\phi]_0^{2\pi}$$

$$\therefore \quad Q = D_r\,r\,2\pi\,L \qquad \ldots (I)$$

Let us find charge enclosed by right circular cylinder of length L.

$$\therefore \quad dv = r\,dr\,d\phi\,dz$$

$$\therefore \quad Q = \int_v \rho_v\,dv = \int_{z=0}^{L} \int_{\phi=0}^{2\pi} \int_{r=0}^{r} 5\,r\,e^{-2r}\,r\,dr\,d\phi\,dz$$

$$= 5[z]_0^L\,[\phi]_0^{2\pi} \int_{r=0}^{r} r^2\,e^{-2r}\,dr \qquad \ldots \text{Use integration by parts}$$

Now $\int uv\,dx = u\int v\,dx - \int u'\int v\,dx\,dx$

$$\therefore \quad \int r^2 e^{-2r}\,dr = r^2\int e^{-2r}dr - \int 2r\int e^{-2r}dr\,dr$$

$$= r^2\int e^{-2r}\,dr - \int 2r\left[\frac{e^{-2r}}{-2}\right]dr$$

$$= r^2\left[\frac{e^{-2r}}{-2}\right] + \int r\,e^{-2r}\,dr \qquad \text{... Again by parts}$$

$$= -\frac{1}{2}r^2 e^{-2r} + r\int e^{-2r}\,dr - \int 1\int e^{-2r}\,dr\,dr$$

$$= -\frac{1}{2}r^2 e^{-2r} + r\left(\frac{e^{-2r}}{-2}\right) - \int \frac{e^{-2r}}{-2}\,dr$$

$$= \left[-\frac{1}{2}r^2 e^{-2r} - \frac{1}{2}r\,e^{-2r} - \frac{1}{4}e^{-2r}\right]_0^r$$

$$= -\frac{1}{2}r^2 e^{-2r} - \frac{1}{2}r\,e^{-2r} - \frac{1}{4}e^{-2r} + \frac{1}{4} \qquad \text{... Putting limits}$$

$$\therefore \quad Q = 5\times 2\pi L\left\{-\frac{1}{2}r^2 e^{-2r} - \frac{1}{2}r\,e^{-2r} - \frac{1}{4}e^{-2r} + \frac{1}{4}\right\} \qquad \text{... (II)}$$

Equating (I) and (II),

$$D_r = \frac{5}{r}\left\{-\frac{1}{2}r^2 e^{-2r} - \frac{1}{2}r\,e^{-2r} - \frac{1}{4}e^{-2r} + \frac{1}{4}\right\}$$

$$\therefore \quad \overline{D} = D_r\,\overline{a}_r = \frac{5}{r}\left\{-r^2\frac{e^{-2r}}{2} - \frac{r\,e^{-2r}}{2} - \frac{e^{-2r}}{4} + \frac{1}{4}\right\}\overline{a}_r\ C/m^2$$

Ex. 3.23 *Given that the field* $\overline{D} = \dfrac{5\sin\theta\cos\phi}{r}\,\overline{a}_r\ C/m^2$. *Find*

a) Volume charge density

b) The total electric flux leaving the surface of the spherical volume of radius 2m.

[P.U. Dec-2001]

Sol. : a) For ρ_v, use Gauss's law in point form.

$$\nabla\cdot\overline{D} = \rho_v$$

Given $\overline{D}$ in spherical coordinates and $D_\theta = D_\phi = 0$.

$$\therefore \quad \nabla\cdot\overline{D} = \frac{1}{r^2}\frac{\partial}{\partial r}\left(r^2 D_r\right) = \frac{1}{r^2}\frac{\partial}{\partial r}\left(\frac{r^2 5\sin\theta\cos\phi}{r}\right)$$

$$= \frac{5\sin\theta\cos\phi}{r^2}\frac{\partial(r)}{\partial r} \qquad \ldots \frac{\partial r}{\partial r}=1$$

$$\therefore \qquad \rho_v = \frac{5\sin\theta\cos\phi}{r^2}\ C/m^3$$

b) Surface of cylindrical volume r = 2m. Using divergence theorem,

$$\psi = \oint_S \overline{D}\cdot d\overline{S} = \int_v (\nabla\cdot\overline{D})\,dv$$

$$dv = r^2\sin\theta\,dr\,d\theta\,d\phi \quad \text{in spherical system}$$

$$\therefore \qquad \psi = \int_{\phi=0}^{2\pi}\int_{\theta=0}^{\pi}\int_{r=0}^{2}\frac{5\sin\theta\cos\phi}{r^2}\times r^2\sin\theta\,dr\,d\theta\,d\phi$$

$$= 5[r]_0^2\,[-\sin\phi]_0^{2\pi}\times\int_{\theta=0}^{2\pi}\sin^2\theta\,d\theta$$

$$= 5\times2\times0\times\int_{\theta=0}^{2\pi}\sin^2\theta\,d\theta = 0\ C$$

Students can verify the result by divergence theorem.

Ex. 3.24 *Determine the flux crossing 1 mm by 1 mm area on the surface of the cylindrical sheet at r = 10 m, z = 2 m, ϕ = 53.2° if,*
$\overline{D} = 2x\overline{a}_x + 2(1-y)\overline{a}_y + 4z\overline{a}_z\ C/m^2$. **[M.U. May-2000, Dec-2000]**

Sol. : The given $\overline{D}$ is in cartesian coordinates hence converting point P(10, 53.2°, 2) to cartesian,

$$x = r\cos\phi = 10\cos 53.2° = 6$$

$$y = r\sin\phi = 10\sin 53.2° = 8 \text{ and } z = 2$$

$\therefore$ P (6, 8, 2) in cartesian system.

Now $\overline{D} = 12\,\overline{a}_x - 14\,\overline{a}_y + 8\,\overline{a}_z\ C/m^2$ at point P. Substituting x = 6, y = 8 and z = 2 in $\overline{D}$.

The given area 1 mm × 1mm = 10^{-6} m² is very very small i.e. differential dS compared to the large radius of the cylinder.

$$d\overline{S} = dS\,\overline{a}_n$$

where $\overline{a}_n$ = Normal unit vector to dS

and dS = Magnitude of area = 10^{-6} m²

According to Gauss's law,

$$d\psi = \overline{D} \cdot d\overline{S}$$

and there is no need to integrate it as the area itself is differential hence flux crossing it is also $d\psi$.

But $\overline{D} \cdot d\overline{S}$ **is required as that component of $\overline{D}$ which is in same direction as $\overline{a}_n$ and will decide the amount of flux. Hence obtain $\overline{a}_n$ and find $\overline{D} \cdot d\overline{S}$.** It is not just multiplication of magnitude of $\overline{D}$ at point P and area at point P.

To find $\overline{a}_n$, consider the cylinder as shown in the Fig. 3.36.

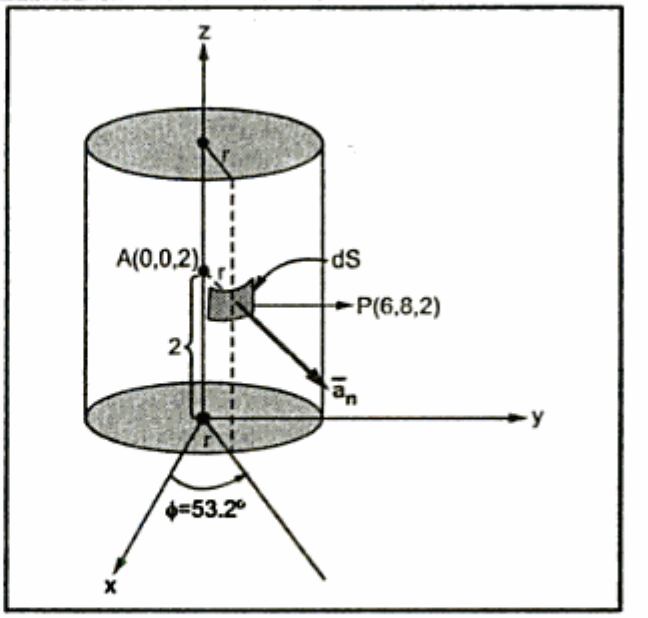

Fig. 3.36

The normal $\overline{a}_n$ is $\overline{a}_r$ in the cylindrical coordinates to dS. But **to obtain $\overline{a}_n$ in cartesian coordinates,** the point P is radially extended to meet axis of cylinder at A. Now A is (0, 0, 2). The vector AP is now in radial direction at P and represents direction of $\overline{a}_n$ to dS at P.

$$\therefore \quad \overline{a}_n = \frac{(6-0)\overline{a}_x + (8-0)\overline{a}_y + (2-2)\overline{a}_z}{\sqrt{(6-0)^2 + (8-0)^2 + (2-2)^2}} = \frac{6\overline{a}_x + 8\overline{a}_y}{10}$$

$$= 0.6\,\overline{a}_x + 0.8\,\overline{a}_y$$

$$\therefore \quad d\overline{S} = dS\,\overline{a}_n = 10^{-6}\left[0.6\overline{a}_x + 0.8\overline{a}_y\right]$$

$$\therefore \quad d\psi = \overline{D} \cdot d\overline{S} \text{ at P} = \left(12\overline{a}_x - 14\overline{a}_y + 8\overline{a}_z\right) \cdot 10^{-6}\left[0.6\overline{a}_x + 0.8\overline{a}_y\right]$$

$$= 10^{-6}\left\{(12 \times 0.6)(\overline{a}_x \cdot \overline{a}_x) - (14)(0.8)(\overline{a}_y \cdot \overline{a}_y)\right\}$$

All other dot products are zero.

$$= 10^{-6}\{7.2 - 11.2\} = 10^{-6}\{-4\} = -4\ \mu C$$

Ex. 3.25 *The spherical region, $0 < r < 10$ cm contains a uniform volume charge density $\rho_v = 4\mu C / m^3$.*

a) Find Q_{tot}, $0 < r < 10$ cm *b) Find D_r, $0 < r < 10$ cm*

c) The nonuniform volume charge density,

$\rho_v = \dfrac{-3}{(r^3 + 0.001)}\ nC / m^3$, *exists for 10 cm $< r < \alpha$. Find α such that the total charge, $0 < r < \alpha$, is zero.* **[P.U. May-91, Dec.-2003]**

Sol. : a) To find Q_{tot} use standard result as ρ_V is constant.

$$Q_{tot} = \int_v \rho_V \, dv = \frac{4}{3}\pi(r)^3 \rho_V \Big|_{r=10\,cm} \qquad \ldots \int_v dv = \frac{4}{3}\pi(r)^3$$

$$= \frac{4}{3}\pi(0.1)^3 \times 4 = 0.016755 \ \mu C$$

Alternatively, $$Q_{tot} = \int_{\theta=0}^{\pi}\int_{\phi=0}^{2\pi}\int_{r=0}^{0.1\,m} \rho_v \, r^2 \sin\theta \, dr \, d\theta \, d\phi = 0.016755 \ \mu C$$

b) To find D_r, consider a Gaussian surface as a sphere of radius r as shown in the Fig. 3.37. Consider dS at point P. The $\overline{D}$ is in $\overline{a}_r$ direction hence $\overline{D} = D_r \, \overline{a}_r$ and dS normal to $\overline{a}_r$ is $r^2 \sin\theta \, d\theta \, d\phi$.

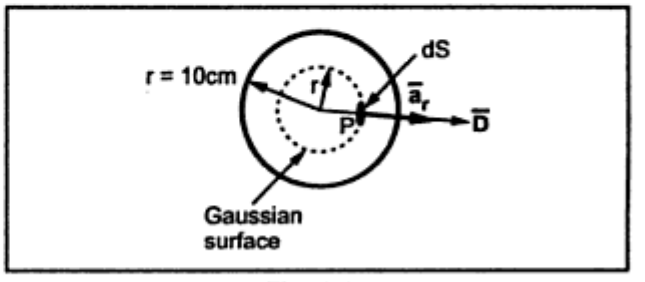

Fig. 3.37

$\therefore \ d\overline{S} = r^2 \sin\theta \, d\theta \, d\phi \, \overline{a}_r$

$$\therefore \qquad Q = \oint_S \overline{D} \cdot d\overline{S} = \int_{\phi=0}^{2\pi}\int_{\theta=0}^{\pi} D_r \, r^2 \sin\theta \, d\theta \, d\phi \qquad \ldots (\overline{a}_r \cdot \overline{a}_r = 1)$$

$$\therefore \qquad Q = D_r \, r^2 \left[-\cos\theta\right]_0^{\pi} \left[\phi\right]_0^{2\pi}$$

$$\therefore \qquad D_r = \frac{Q}{4\pi r^2} \quad \text{and} \quad \overline{D} = \frac{Q}{4\pi r^2}\,\overline{a}_r$$

But $$Q = \frac{4}{3}\pi r^3 \rho_v \quad \text{for a sphere of r}$$

$$\therefore \qquad \overline{D} = \frac{\frac{4}{3}\pi r^3 \, 4\times10^{-6}}{4\pi r^2} = 1.333 \ r \ \ \mu C/m^2$$

c) Let charge between 10 cm < r < α is Q_1.

$$\therefore \qquad Q_1 = \int_v \rho_v \, dv = \int_{\phi=0}^{2\pi}\int_{\theta=0}^{\pi}\int_{r=0.1}^{\alpha} \rho_v \, r^2 \sin\theta \, dr \, d\theta \, d\phi$$

$$= \left[-\cos\theta\right]_0^{\pi} \left[\phi\right]_0^{2\pi} \int_{r=0.1}^{\alpha} \frac{-3\,r^2}{r^3 + 0.001} \, dr$$

Put $\quad r^3 + 0.001 = u$

$$\therefore \qquad 3\,r^2\,dr = du$$

$$\therefore \qquad Q_1 = 2\pi \times 2 \times \int_{r=0.1}^{\alpha} -\frac{du}{u} = 4\pi\left[-ln\,u\right]_{r=0.1}^{\alpha}$$

Resubstitute $u = r^3 + 0.001$,

$$\therefore \qquad Q_1 = -4\pi\left[ln\,r^3 + 0.001\right]_{0.1}^{\alpha} = -4\pi\left[ln\frac{\alpha^3 + 0.001}{2\times10^{-3}}\right]\ \text{nC}$$

Hence the total charge for $0 < r < \alpha$ is, $Q_{tot} + Q_1$ i.e. resultant charge Q_R is

$$Q_R = 0.016755 \times 10^{-6} - 4\pi\,ln\left[\frac{\alpha^3 + 0.001}{2\times10^{-3}}\right]\times10^{-9}\ \text{C}$$

But required $Q_R = 0$

$$\therefore\ 4\pi\,ln\left[\frac{\alpha^3 + 0.001}{2\times10^{-3}}\right]\times10^{-9} = 0.016755 \times 10^{-6}$$

$$\therefore \quad ln\left[\frac{\alpha^3 + 0.001}{2\times10^{-3}}\right] = 1.3333$$

$$\therefore \qquad \frac{\alpha^3 + 0.001}{2\times10^{-3}} = e^{1.3333} = 3.7936$$

$$\therefore \qquad \alpha^3 = 6.5872 \times 10^{-3}$$

$$\therefore \qquad \alpha = 0.1874\ \text{m} = 18.74\ \text{cm}$$

Ex. 3.26 *A spherical volume charge density is given by,*

$$\rho_v = \rho_0\left(1 - \frac{r^2}{a^2}\right), \qquad r \le a$$

$$= 0 \qquad\qquad , \qquad r > a$$

a) Calculate the total charge Q.
b) Find $\overline{E}$ outside the charge distribution.
c) Find $\overline{E}$ for $r < a$.
d) Show that the maximum value of $\overline{E}$ is at $r = 0.745\,a$. Obtain $|\overline{E}|$ max.

[M.U. Dec-96]

Sol. : Note that the ρ_v is dependent on the variable r. Hence though the charge distribution is sphere of radius 'a' we can not obtain Q just by multiplying ρ_v by $\left(\frac{4}{3}\pi a^3\right)$ as ρ_v is not constant. As it depends on r, it is necessary to consider differential volume dv and integrating from r = 0 to a, total Q must be obtained. **Thus if ρ_v depends on r, do not use standard results.**

a) $$dv = r^2 \sin\theta \, dr \, d\theta \, d\phi$$ ... Spherical system

$$\therefore \quad Q = \int_v \rho_v \, dv = \int_{\phi=0}^{2\pi} \int_{\theta=0}^{\pi} \int_{r=0}^{a} \rho_0 \left(1 - \frac{r^2}{a^2}\right) r^2 \sin\theta \, dr \, d\theta \, d\phi$$

$$= \rho_0 \left[-\cos\theta\right]_0^{\pi} \left[\phi\right]_0^{2\pi} \int_{r=0}^{a} \left\{r^2 - \frac{r^4}{a^2}\right\} dr$$

$$= \rho_0 \left[-(-1) - (-1)\right] \left[2\pi\right] \left[\frac{r^3}{3} - \frac{r^5}{5a^2}\right]_0^a$$

$$= \rho_0 \times 2 \times 2\pi \times \left[\frac{a^3}{3} - \frac{a^3}{5}\right]$$

$$= \rho_0 \times 4\pi \times \frac{2a^3}{15} = \frac{8\pi}{15} \rho_0 a^3 \text{ C}$$

Outside sphere, $\rho_v = 0$ so $Q = 0$ for $r > a$.

b) The total charge enclosed by the sphere can be assumed to be point charge placed at the centre of the sphere as per Gauss's law.

$$\therefore \quad \overline{D} = \frac{Q}{4\pi r^2} \overline{a}_r \quad \text{at} \quad r > a$$

$\therefore$ Outside the charge distribution i.e. $r > a$,

$$|\overline{E}| = \frac{Q}{4\pi\varepsilon_0 r^2} = \frac{\frac{8\pi}{15}\rho_0 a^3}{4\pi\varepsilon_0 r^2} = \frac{2}{15} \frac{\rho_0 a^3}{\varepsilon_0} \frac{1}{r^2}$$

$$\therefore \quad \overline{E} = \frac{2}{15} \frac{\rho_0 a^3}{\varepsilon_0} \frac{1}{r^2} \overline{a}_r \text{ V/m}$$

Thus $\overline{E}$ varies with r, outside the charge distribution.

c) For $r < a$, consider a Gaussian surface as a sphere r having $r < a$ as shown in the Fig. 3.38.

Consider dS at point P normal to $\overline{a}_r$ direction, as $\overline{D}$ and $\overline{E}$ are in $\overline{a}_r$ direction.

$$d\overline{S} = r^2 \sin\theta \, d\theta \, d\phi \, \overline{a}_r$$

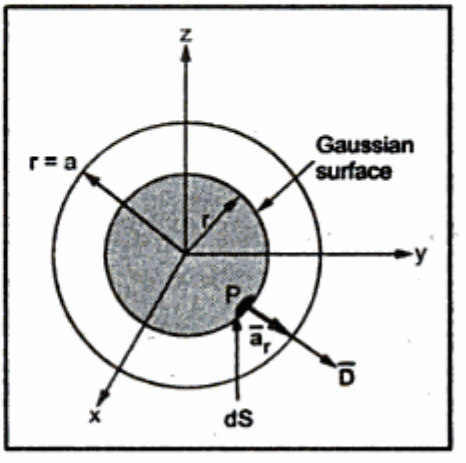

Fig. 3.38

$$\overline{D} = D_r \, \overline{a}_r$$

$$\therefore \quad \overline{D} \cdot d\overline{S} = D_r \, r^2 \sin\theta \, d\theta \, d\phi$$

$$\therefore \quad Q_1 = \oint_S \overline{D} \cdot d\overline{S}$$

$$= \int_{\phi=0}^{2\pi} \int_{\theta=0}^{\pi} D_r \, r^2 \sin\theta \, d\theta \, d\phi$$

$$= D_r \, r^2 \left[-\cos\theta\right]_0^{\pi} \left[\phi\right]_0^{2\pi} = 4\pi r^2 \, D_r$$

where Q_1 = Charge enclosed by Gaussian surface

$$\therefore \quad D_r = \frac{Q_1}{4\pi r^2}$$

$$\therefore \quad \overline{D} = \frac{Q_1}{4\pi r^2} \, \overline{a}_r$$

$$\therefore \quad \overline{E} = \frac{\overline{D}}{\varepsilon_0} = \frac{Q_1}{4\pi\varepsilon_0 \, r^2} \, \overline{a}_r$$

Let us find Q_1, charge enclosed by Gaussian surface of radius r.

$$Q_1 = \int_{\phi=0}^{2\pi} \int_{\theta=0}^{\pi} \int_{r=0}^{r} \rho_0 \left(1 - \frac{r^2}{a^2}\right) r^2 \sin\theta \, dr \, d\theta \, d\phi$$

$$= \rho_0 \left[-\cos\theta\right]_0^{\pi} \left[\phi\right]_0^{2\pi} \left\{\frac{r^3}{3} - \frac{r^5}{5a^2}\right\}_0^r$$

$$= 4\pi\rho_0 \left(\frac{r^3}{3} - \frac{r^5}{5a^2}\right) C$$

Using in the equation of $\overline{E}$, field intensity for $r < a$ is,

$$\overline{E} = \frac{4\pi\rho_0 \left(\frac{r^3}{3} - \frac{r^5}{5a^2}\right)}{4\pi\varepsilon_0 \, r^2} \, \overline{a}_r$$

$$= \frac{\rho_0}{\varepsilon_0} \left[\frac{r}{3} - \frac{r^3}{5a^2}\right] \overline{a}_r \quad \text{V/m}$$

d) To find $\overline{E}$ to be maximum, inside the sphere i.e. $r < a$ obtain,

$$\frac{d|\overline{E}|}{dr} = 0$$

$$\therefore \frac{d}{dr}\left\{\frac{\rho_0}{\varepsilon_0}\left(\frac{r}{3} - \frac{r^3}{5a^2}\right)\right\} = 0$$

$$\therefore \quad \frac{1}{3} - \frac{3r^2}{5a^2} = 0 \qquad \text{as } \rho_v \neq 0, \quad \varepsilon_0 \neq 0$$

$$\therefore \quad r^2 = \frac{5a^2}{9}$$

$$\therefore \quad r = 0.745\ a \qquad \text{... Proved}$$

$$\therefore \quad |\overline{E}|_{max} = \frac{\rho_0}{\varepsilon_0}\left[\frac{0.745a}{3} - \frac{(0.745\ a)^3}{5a^2}\right]$$

$$= \frac{0.1656\ a\rho_0}{\varepsilon_0} \text{ V/m}$$

Important Results

☞	$\overline{E}$ and $\overline{D}$ for various charge distributions	
Charge distribution	Field intensity $\overline{E}$ in V/m	Flux density $\overline{D} = \varepsilon_0 \overline{E}$ in C / m²
Point charge Q C	$\frac{Q}{4\pi\varepsilon_0 r^2}\overline{a}_r$	$\frac{Q}{4\pi r^2}\overline{a}_r$
Infinite line charge having density ρ_L C/m	$\frac{\rho_L}{4\pi\varepsilon_0 r}\overline{a}_r$	$\frac{\rho_L}{2\pi r}\overline{a}_r$
Infinite surface charge having density ρ_s C / m²	$\frac{\rho_s}{2\varepsilon_0}\overline{a}_n$	$\frac{\rho_s}{2}\overline{a}_n$
Volume charge having density ρ_v C / m³	$\frac{\int_v \rho_v\, dv}{4\pi\varepsilon_0 r^2}\overline{a}_r$	$\frac{\int \rho_v\, dv}{4\pi r^2}\overline{a}_r$

☞	Gauss's law
The electric flux passing through any closed surface is equal to the total charge enclosed by that surface. Mathematical representation, $\psi = Q = \oint_s \overline{D} \cdot d\overline{S}$	

Charge configuration	Charge enclosed
Point charges $Q_1, Q_2, \ldots Q_n$	$\psi = Q = \sum_{i=1}^{n} Q_i$
Line charge ρ_L	$\psi = Q = \int_L \rho_L \, dL$
Surface charge ρ_S	$\psi = Q = \int_S \rho_S \, dS$
Volume charge ρ_v	$\psi = Q = \int_v \rho_v \, dv$

☞	Steps to apply Gauss's law to obtain $\overline{D}$ or $\overline{E}$
1.	Select the Gaussian surface such that $\overline{D}$ is normal to the surface.
2.	Identify direction of $\overline{D}$ in given coordinate system, thus $\overline{D} = D_n \overline{a}_n$
3.	Select dS and write $d\overline{S} = dS \, \overline{a}_n$ where $\overline{a}_n$ is normal to dS selected, as per the coordinate system.
4.	Find $\overline{D} \cdot d\overline{S}$ i.e. dot product.
5.	Integrate over the surface i.e. $\oint_S \overline{D} \cdot d\overline{S}$. Keep D_n as unknown. This is flux ψ i.e. charge Q.
6.	Evaluate Q for the surface selected.
7.	Equating known Q to $\oint_S \overline{D} \cdot d\overline{S}$ obtained, the unknown D_n can be obtained.
8.	Thus $\overline{D} = D_n \, \overline{a}_n$ and $\overline{E} = \overline{D} / \varepsilon_0$ in free space.

☞	Applications of Gauss's law
1. Coaxial cable Inner radius a Outer radius b	$\overline{E} = \frac{\rho_L}{2\pi\varepsilon_0 r} \overline{a}_r \quad a < r < b$ $\overline{D} = \frac{\rho_L}{2\pi r} \overline{a}_r \quad a < r < b$ $\rho_{S(outer)} = -\frac{a}{b} \rho_{S(inner)}$
2. Infinite sheet of charge ρ_S C / m² lying in z = 0 plane	$\overline{E} = \frac{\rho_S}{2\varepsilon_0} \overline{a}_z$ $\overline{D} = \frac{\rho_S}{2} \overline{a}_z$

Contents

Second Revised Edition
2009

Price INR 410/-
ISBN 978-81-8431-494-6

9 788184 314946

Technical Publications Pune
1, Amit Residency, 412 Shaniwar Peth, Pune - 411030, M.S., India.
Telefax : +91 (020) 24495496/97, Email : technical@vtubooks.com
Visit us at : www.vtubooks.com